CABINET - REAR VIEW

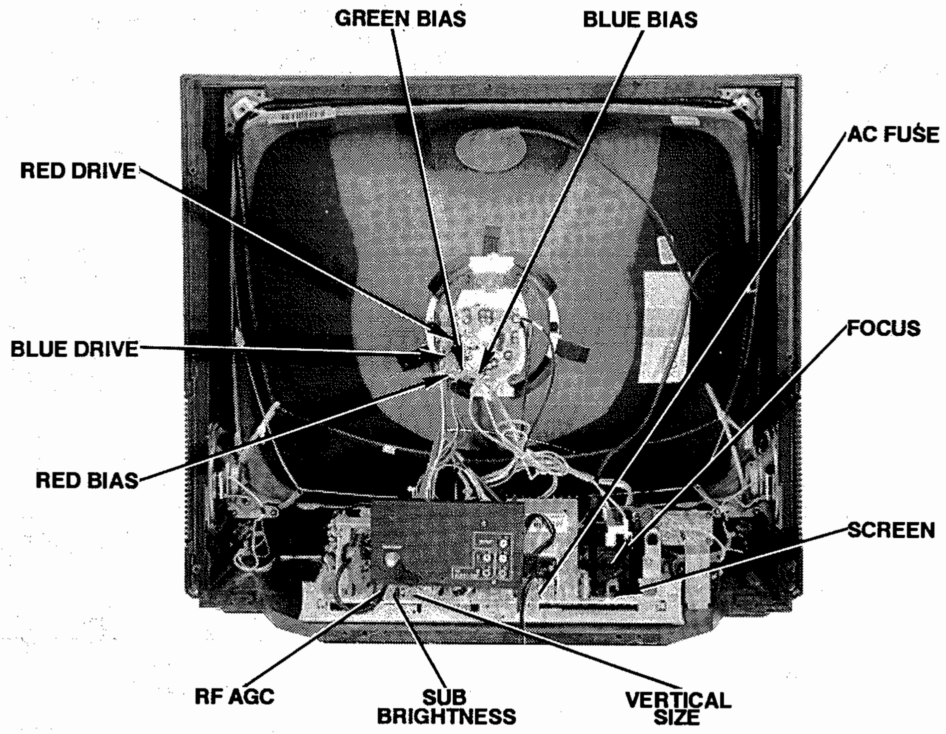

TEST JIG HOOKUP

Function	Chek-A-Color Adapter No.	PC Board Plug	Pin	Color
CRT	B239	# DY	1	Black
Yoke	D482		2	Yellow
Yoke Setting	YP1		4	Blue
Comments	Focus Tap		6	Red

The listing of any available replacement part herein in no case constitutes a recommendation, warranty, or guarantee by Howard W. Sams & Company as to the quality and suitability of such replacement part. The numbers of the listed parts have been compiled from information furnished to Howard W. Sams & Company by the manufacturers of the specific type of replacement part listed.

Reproduction or use, without express permission, of editorial or pictorial content, in any manner, is prohibited. No patent liability is assumed with respect to the use of the information contained herein.

©1992 by Howard W. Sams & Company
2647 Waterfront Parkway East Drive, Suite 300
Indianapolis, IN 46214-2012

Printed in the United States of America 5 4 3 2 1

92IC02256

0 81262 02995 4

2995

SET 2995

MODEL SP2530FE (CHASSIS AEDC200)

PANASONIC

PHOTOFACT® Technical Service Data

INDEX

Convergence Adjustments 1
GridTrace Location Guide
- A-Main Board 5
- C-CRT Board 6
- E-Stereo/Sap Board 6
- F-Comb Filter Board 6
- X-TV/Video Board 6

IC Functions 3
Important Parts Information 8
Miscellaneous Adjustments 1
Parts List
- TV 7, 8

Photos
- A-Main Board 5
- Cabinet-Rear View 1
- C-CRT Board 6
- CRT Neck Assembly 1
- E-Stereo/Sap Board 6
- F-Comb Filter Board 6
- X-TV/Video Board 6

Quick-Checks Troubleshooting
- A-Main Board 5
- C-CRT Board 6

Placement Chart 4
Safety Precautions 1
Schematics
- CRT 3
- MPU 4
- Multi Sound Decoder 3
- Multi Sound Decoder/Audio 3
- Power Supply 3
- Television 2

Stereo/Sap Adjustments 1
Terminal Guides and Notes 3
Test Equipment 4
Test Jig Hookup 1
Troubleshooting 1
Tuner Information 4

For Supplier Address, See PHOTOFACT Annual Index

PANASONIC
Model CTN-2580S (Chassis AEDP200)

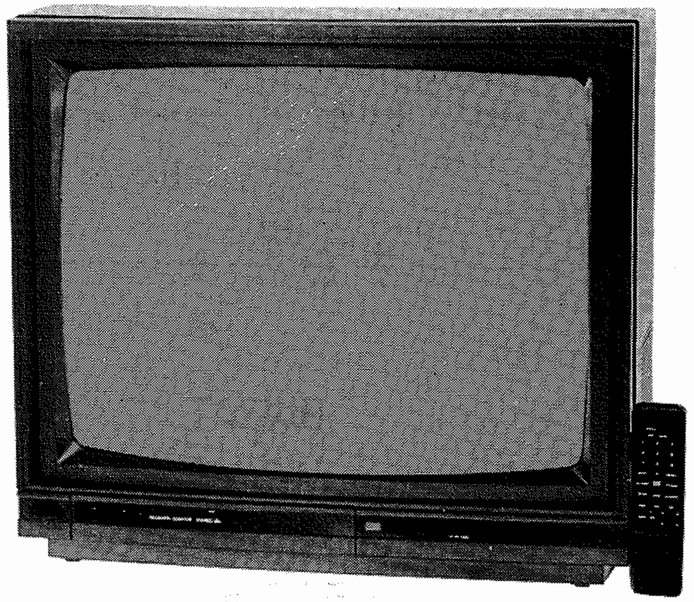

Complete coverage for servicing a television receiver...

- Schematics
- Parts lists
- Component locations
- Troubleshooting guide

2995

HOWARD W. SAMS & COMPANY

JUNE 1992 SET 2995

TELEVISION SCHEMATIC continued

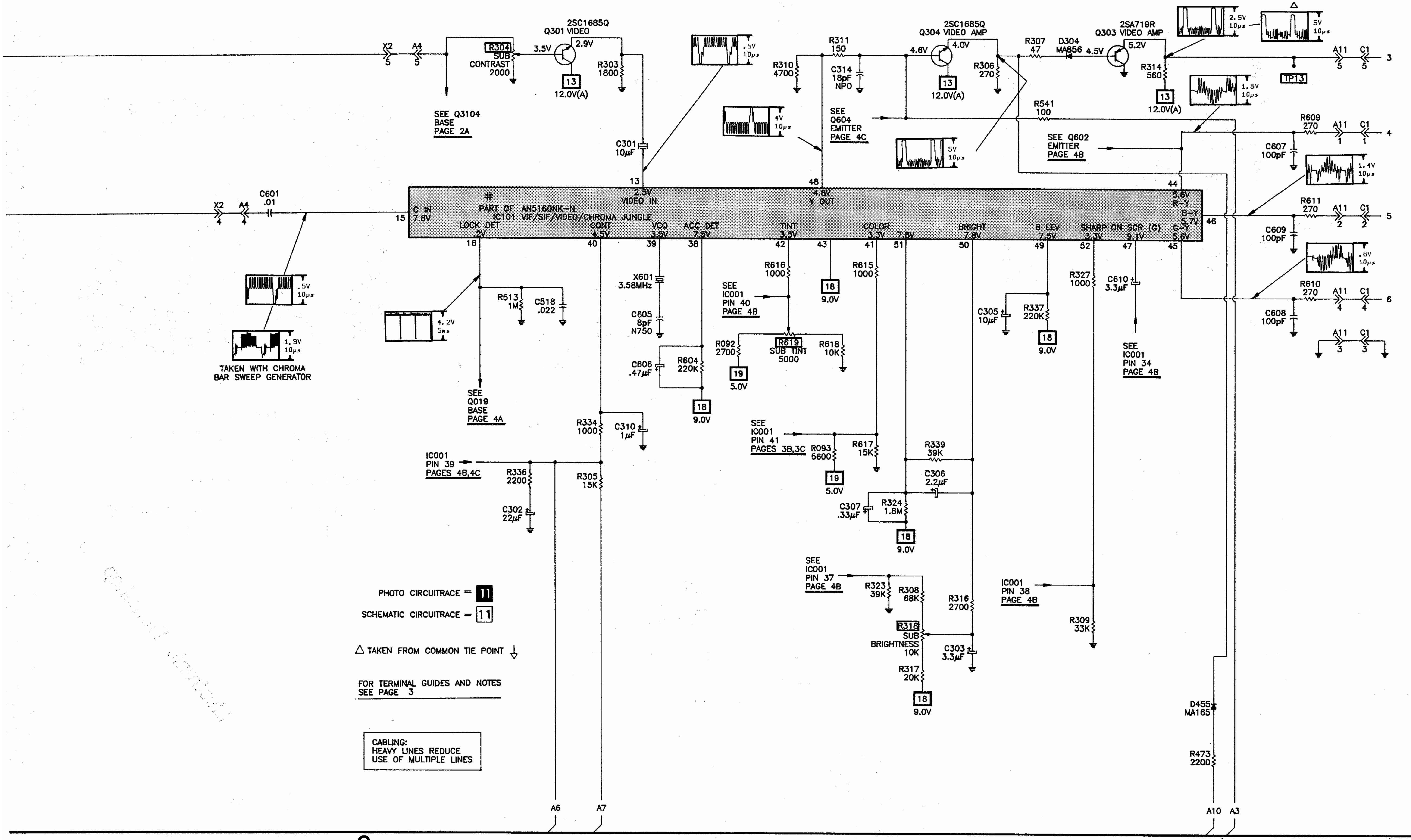

MISCELLANEOUS ADJUSTMENTS

PRETUNING

NOTE: All procedures require an antenna connected and power applied to the set. Select TV/ANT tuning mode.

Auto Memory

1. Press the Set-Up button until the arrow points at "AUTO CH".
2. Press the Plus button. Available channels are scanned and stored in memory.

Add Channel

1. Select channel.
2. Press the Set-Up button until the arrow points at the channel display.
3. Press the plus button.
4. Repeat step one thru three to add other channels.

Delete Channel

1. Select channel
2. Press the Set-Up button until the arrow points at the channel display.
3. Press the Minus button.
4. Repeat step one thru three to erase other channels.

Sleep Timer

1. Press the Sleep button.
2. Unit can be set to turn off after 30, 60 or 90 minutes.

Normalize Settings

1. Press the Video button.
2. Press the Norm button.

NOTE: This set employs Digital customer controls. All adjustments are at normalized position unless otherwise indicated. Tuning system in TV/ANT mode.

B+ CHECK

Connect a digital DC voltmeter to TP91, low side to TP92. Set Brightness, Picture and Color to MINIMUM. With AC line voltage set to 120VAC, B+ should read 130.5VDC ±1VDC.

HIGH VOLTAGE CHECK

Tune in a picture. Connect a high voltage probe to CRT anode. High Voltage must read 29.5KV (+1.0KV -1.5KV).

RF AGC

Tune in a picture. Adjust AGC Control (R106) Counterclockwise until snow appears in pictures, then Clockwise to a point just past where snow disappears.

SUB-BRIGHTNESS

Tune in a crosshatch pattern. Set Brightness, Picture and Color Controls to MINIMUM. Adjust Sub-Brightness Control (R318) for just visible highlights. Set Brightness, Picture and Color Controls to Maximum. Check for blooming and readjust if required.

SUB-CONTRAST

NOTE: Do not make adjustments to Sub-Contrast Control unless CRT, CRT Board, or associated components are replaced.

Tune in a color bar pattern. Connect an oscilloscope to TP13, low side to ground. Adjust Sub-Contrast Control (R304) for 1.5V p-p level of the video portion of the waveform.

HORIZONTAL CENTERING

Tune in a crosshatch pattern. Adjust Horizontal Centering Control (R524) for best horizontal centering.

MPU REFERENCE OSCILLATOR

Tune in channel 13. Connect a frequency counter to connector A3 pin 4. Set tuning system to TV/ANT. Connect a jumper from pin 7 of IC001 to ground. Adjust MPU Reference Oscillator (C031) for exactly 500kHz ±3.5Hz.

SUB-TINT

Tune in an active channel. Adjust Sub-Tint Control (R619) for normal skin tones.

VIDEO LEVEL

NOTE: Do not make adjustment unless Video Level Control is replaced.

Tune in a colorbar pattern. Connect an oscilloscope to pin 7 of connector A4. Adjust Video Level Control (R114) for 1.0V p-p.

COMB FILTER

Tune in a colorbar pattern. Connect an oscilloscope to TP13. Adjust Phase Coil (L304), and Balance Control (R335) for MINIMUM burst amplitude.

MISCELLANEOUS ADJUSTMENTS continued

COLOR TEMPERATURE

Disconnect the antenna. Set the Brightness, and Contrast Controls to Mid-range. Set the Color, and Screen Control to MINIMUM. Set the Red (R358) and Blue (R357) Drive controls, and Red (R354), Green (R356), and Blue, (R355) Bias Controls to midpoint. Connect a jumper between TPS8 and TPS9 (ground) to collapse the vertical. Adjust Screen Control to obtain a faintly visible line of one predominant color, then back off until line just disappears. Set the Drive and Low Light Controls to Maximum. Adjust two remaining Bias Controls for best white balance of line. Remove the jumper, and Set the Color Control to Mid-range.

PURITY

Use a degaussing coil to demagnetize the CRT. Place a jumper between TP14 and ground. Turn Red Low Light (R354) and Blue Low Light (R355) Counterclockwise to obtain a green screen. Adjustment of Drive Controls is necessary. Loosen Deflection Yoke (L570) and move it back as far as possible. Loosen locking ring and move the purity tabs to center the vertical green band. Slowly slide the deflection yoke forward until a uniform green screen is obtained.

CONVERGENCE

Connect a signal generator to antenna terminals and tune in a dot pattern. Adjust 4-pole magnets to converge the red and blue dots at the center of the screen. Adjust 6-pole magnets to converge the red/blue dots over the green dots at the center of the screen. Tune in a crosshatch pattern. Remove rubber wedges between the Deflection Yoke (L570) and the CRT. Tilt deflection yoke up or down to converge the vertical lines at the top and bottom of the screen and the horizontal lines at the left and right sides of the screen. Tilt the deflection yoke left or right to converge the horizontal lines at the top and bottom of the screen and the vertical lines at the left and right sides of the screen. Repeat convergence procedure if necessary to obtain the best overall convergence. Replace rubber wedges.

CRT NECK ASSEMBLY

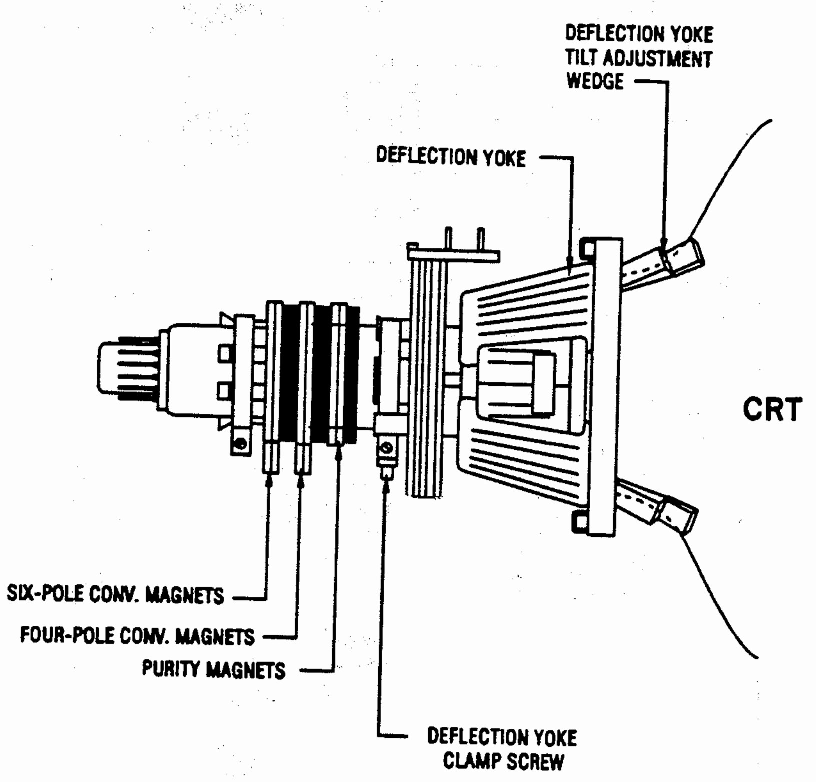

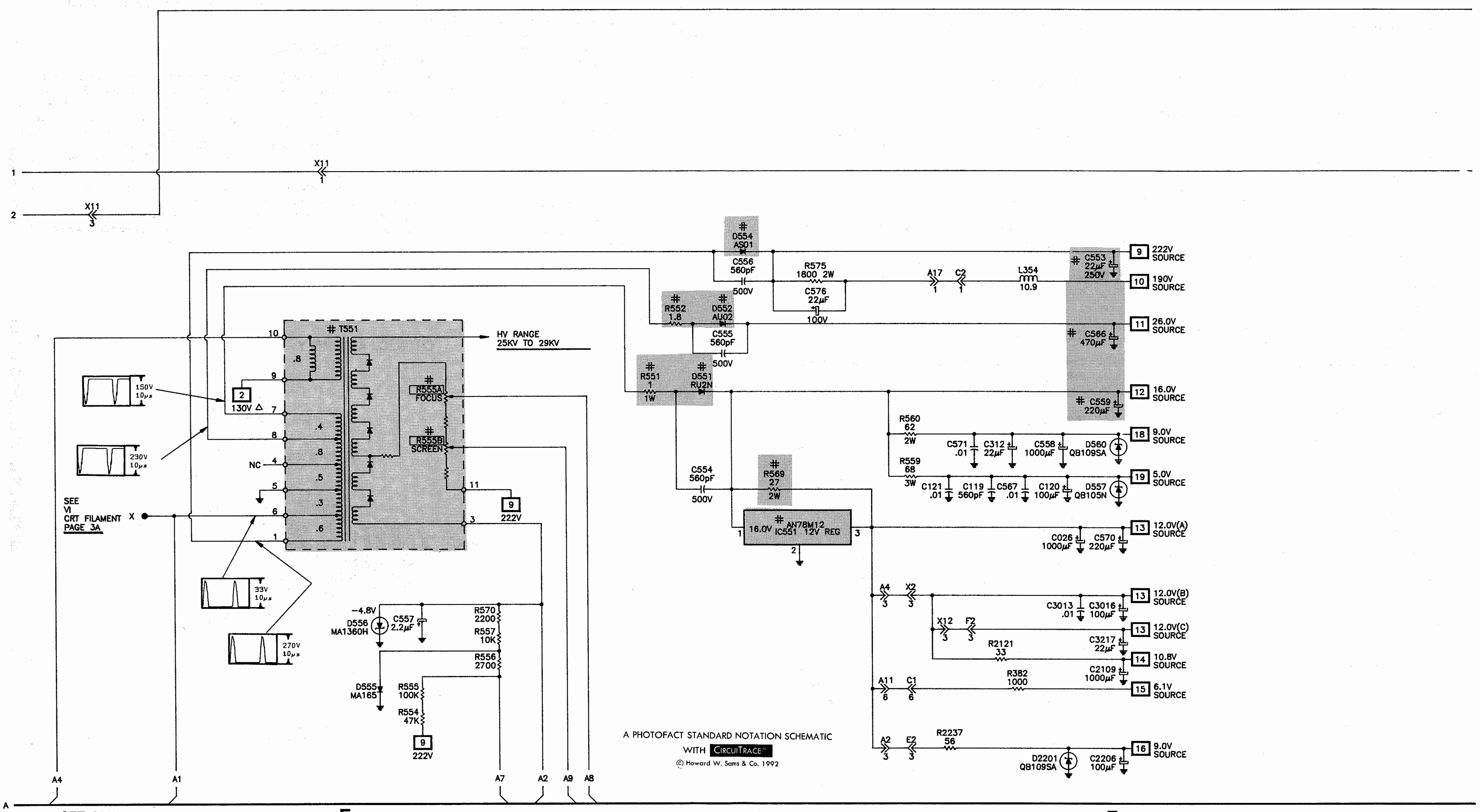
X11
1
X11
3
D554
AS01
C556
560pF
500V
R575
1800 2W
C576
22μF
100V
A17
1
C2
1
L354
10.9
C553
22μF
250V
9 222V SOURCE
10 190V SOURCE
R552
1.8
D552
AU02
C555
560pF
500V
11 26.0V SOURCE
C566
470μF
T551
HV RANGE
25KV TO 29KV
R555A FOCUS
R555B SCREEN
R551
1
1W
D551
RU2N
12 16.0V SOURCE
C559
220μF
R560
62
2W
C571
.01
C312
22μF
C558
1000μF
D560
QB109SA
18 9.0V SOURCE
R559
68
3W
C121
.01
C119
560pF
C567
.01
C120
100μF
D557
QB105N
19 5.0V SOURCE
150V
10μs
2
130V
230V
10μs
NC
C554
560pF
500V
R569
27
2W
16.0V
AN78M12
IC551 12V REG
9
222V
13 12.0V(A) SOURCE
C026
1000μF
C570
220μF
SEE
VI
CRT FILAMENT
PAGE 3A
X
33V
10μs
270V
10μs
-4.8V
D556
MA1360H
C557
2.2μF
R570
2200
R557
10K
R556
2700
D555
MA165
R555
100K
R554
47K
9
222V
A4
3
X2
3
C3013
.01
C3016
100μF
13 12.0V(B) SOURCE
X12
3
F2
3
13 12.0V(C) SOURCE
C3217
22μF
R2121
33
14 10.8V SOURCE
C2109
1000μF
A11
6
C1
6
R382
1000
15 6.1V SOURCE
A PHOTOFACT STANDARD NOTATION SCHEMATIC
WITH CIRCUITRACE
© Howard W. Sams & Co. 1992
A2
3
E2
3
R2237
56
D2201
QB109SA
C2206
100μF
16 9.0V SOURCE
A4
A1
A7
A2
A9
A8
A
E
F

SAFETY PRECAUTIONS

SERVICE WARNING

ONLY qualified service technicians who are familiar with safety checks and guidelines should perform service work. For continued SAFETY:

1. Before replacing parts, disconnect power source to protect electrostatically sensitive parts.
2. Do not attempt to modify any circuit unless so recommended by the manufacturer.
3. When servicing chassis, use an isolation transformer between the line cord and power receptacle.

SERVICING HIGH VOLTAGE AND PICTURE TUBE

Use EXTREME CAUTION when servicing the High Voltage circuits.

1. To discharge static High Voltage, connect a 10-kilohm resistor in series with a test lead between chassis and picture tube anode lead.
2. DO NOT lift picture tube by the neck.
3. ALWAYS wear shatterproof goggles when handling picture tube to protect eyes in case of implosion.

X-RAY RADIATION AND HIGH VOLTAGE LIMITS

Be aware of the instructions and procedures covering x-ray radiation. In solid-state receivers and monitors, the picture tube is the only potential source of x-rays.

1. Keep an accurate High Voltage meter available at all times. Check meter calibration periodically.
2. Whenever servicing a chassis, check High Voltage at various brightness levels to be sure it is regulating properly.
3. Keep High Voltage at rated value, NO HIGHER. Excessive High Voltage may cause x-ray radiation or failure of associated components. DO NOT depend on protection circuits to keep voltage at rated value.
4. When troubleshooting a set with excessive High Voltage, avoid close contact with picture tube. DO NOT operate set longer than necessary. To locate the cause of excessive High Voltage, use a variable AC transformer to regulate voltage.
5. In present chassis, many electrical and mechanical components have safety-related characteristics which are not detectable by visual inspection. Such components are identified by a # on both the schematic and the parts list. For SAFETY, use only equivalent replacement parts when replacing these components.

SAFETY CHECKS – FIRE AND SHOCK HAZARD

Cold Leakage Checks for Sets with Isolated Ground

1. Unplug the AC cord, connect a jumper across the plug prongs, and turn the power switch ON.
2. Use an ohmmeter to measure the resistance between the jumpered AC plug and any exposed metal cabinet parts such as antenna screw heads, control shafts, or handle brackets. Exposed metal parts with a return path should measure between 200 kilohms and 5 megohms. Parts without a return path must register infinity.

Hot Leakage Current Check

1. Plug the AC cord directly into AC outlet. DO NOT use an isolation transformer.
2. Use a 1500-ohm, 10-watt resistor in parallel with a .15-microfarad 150-volt AC capacitor to connect between any exposed metal parts on the set and a good earth ground. (See figure below.)
3. Use an AC voltmeter with at least 1000 ohms-per-volt sensitivity to measure the voltage across the resistor. Check all exposed metal parts and measure voltage at each point.
4. Voltage readings should not exceed .75 volts RMS (5 milliamps AC). Any value exceeding this limit constitutes a potential shock hazard and must be corrected.
5. If AC plug is not polarized, reverse the AC plug and repeat exposed metal part voltage measurement at each point.

GENERAL GUIDELINES

Perform a final SAFETY CHECK before returning set to customer.

1. Check repaired area for poorly soldered or de-soldered connections, and check entire circuit board for solder splashes.
2. Check inner board wiring for pinched wires or wires contacting any high-wattage resistors.
3. Check that all control knobs, shields, covers, grounds and mounting hardware have been replaced. Be sure to replace all insulators and restore proper lead dress.

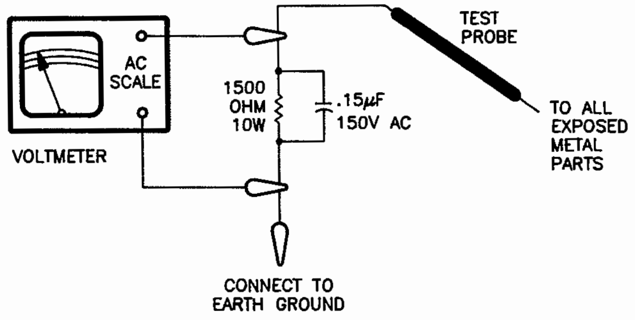

TROUBLESHOOTING

POWER SUPPLY

Check the AC Fuse F001. If Fuse is open:

Check Power Supply Transformer (T001), Audio Power Transformer (T2401), Bridge Rectifiers (D801 thru D804), Capacitors C802 thru C804 and Electrolytics C805, C806.

Apply 120V AC and check for 5VDC Standby voltages at the cathode of D004 and the emitter of Q004.

If Standby voltages are missing:

Check the voltages and components associated with Diodes D004, D031, Transistors Q004, Q005, Transformer T001.

If Standby voltages are present check for 160V* at the cathode of Diode D802.

If 160V* is missing:

Check the voltages and components associated with Line Filter L801, Relay Drive Transistor (Q007), and Power Relay (RL001).

If 160V* is present at the cathode of D802 check for 131V* at TP91
If 160V* is missing check the voltages and components associated with the 131V Regulator IC (IC801).

If the proper voltage is present at TP91 Refer to the "Horizontal" section of this Troubleshooting guide.

* With respect to isolated ground.

AUDIO

Select an active TV channel and check for an MTS signal waveform at pin 28 of IC101.

If the waveform is missing or improper check the voltages, and components associated with pins 25, 28, 29, and 30, of IC101.

If waveform is present, select a station transmitting a signal in stereo and check for an audio waveform at pins 17 and 18 of IC2200.

If waveforms are missing check the voltages, and components associated with IC2200.

If waveforms are present at pins 17 and 18 0f IC2200, check for audio waveforms at pins 4 and 9 of Power Amp IC (IC2301).

If waveforms are missing:

Check the voltages, waveforms, and components associated with Balance/Bass/Treble/Vol Control IC (IC2101), TV/Video IC (IC3002), and Op Amp IC (IC2102).

If waveforms are present:

Check the voltages, waveforms, and components associated with IC2301.

VIDEO

Inject a video signal at TP121 and check for video on the CRT. If video is present:

Refer to the "IF-AGC" section of this Troubleshooting guide.

If there is no video on the CRT:
Check for a video waveform at pin 13 of IC101.

If the waveform is missing:

Check the voltages, waveforms and components associated with Video Amp Transistor (Q102), Y-Amp Transistor (Q301), Ref Amp Transistor (Q322, Q323), Emitter Follower Transistor (Q321), Y/Sync Transistor (Q325), and pins 1,2,3,16 of TV/Video IC (IC3002).

If the waveform is present at pin 13 of IC101:

Check the voltages, waveforms and components associated with pins 40, 48 thru 50 of IC101 and Video Amp Transistors (Q303, Q304).

If the Brightness is inadequate or cannot be controlled:

Check the voltages, waveforms and components associated with pin 50 of IC101.

IF-AGC

Inject a video IF signal at the IF input and check for video on the CRT. If video is present check the Tuner, Tuner Control and Tuner AFC circuits.

If there is no video on the CRT check for a video waveform at TP12.

If video is present at TP121:

Refer to the "Video" section of this Troubleshooting guide.

If there is no video at TP121 apply AGC bias to TP14.

If video is now present at TP121:

Check the voltages, waveforms and components associated with pins 31, 32 and 33 of Video/Chroma Jungle IC (IC101).

If there is still no video at TP121:

Check the voltages, waveforms and components associated with pins 17, 18, 19, 21 thru 24, 26, 27 and 31 thru 37 of IC101.

A defective AGC circuit can cause overloaded picture, excessive snow or loss of video.

See the AGC Voltage Chart for AGC voltages with signal.

AGC VOLTAGE CHART
IC101

Pin 31	2.7V
Pin 32	4.7V
Pin 33	3.9V

CHROMA

Check for a chroma waveform at pin 15 of the Video/Chroma Jungle IC (IC101).

TELEVISION SCHEMATIC continued

A PHOTOFACT STANDARD NOTATION SCHEMATIC
WITH CircuiTrace
© Howard W. Sams & Co. 1992

PHOTO CIRCUITRACE = 11
SCHEMATIC CIRCUITRACE = 11

FOR TERMINAL GUIDES AND NOTES SEE PAGE 3

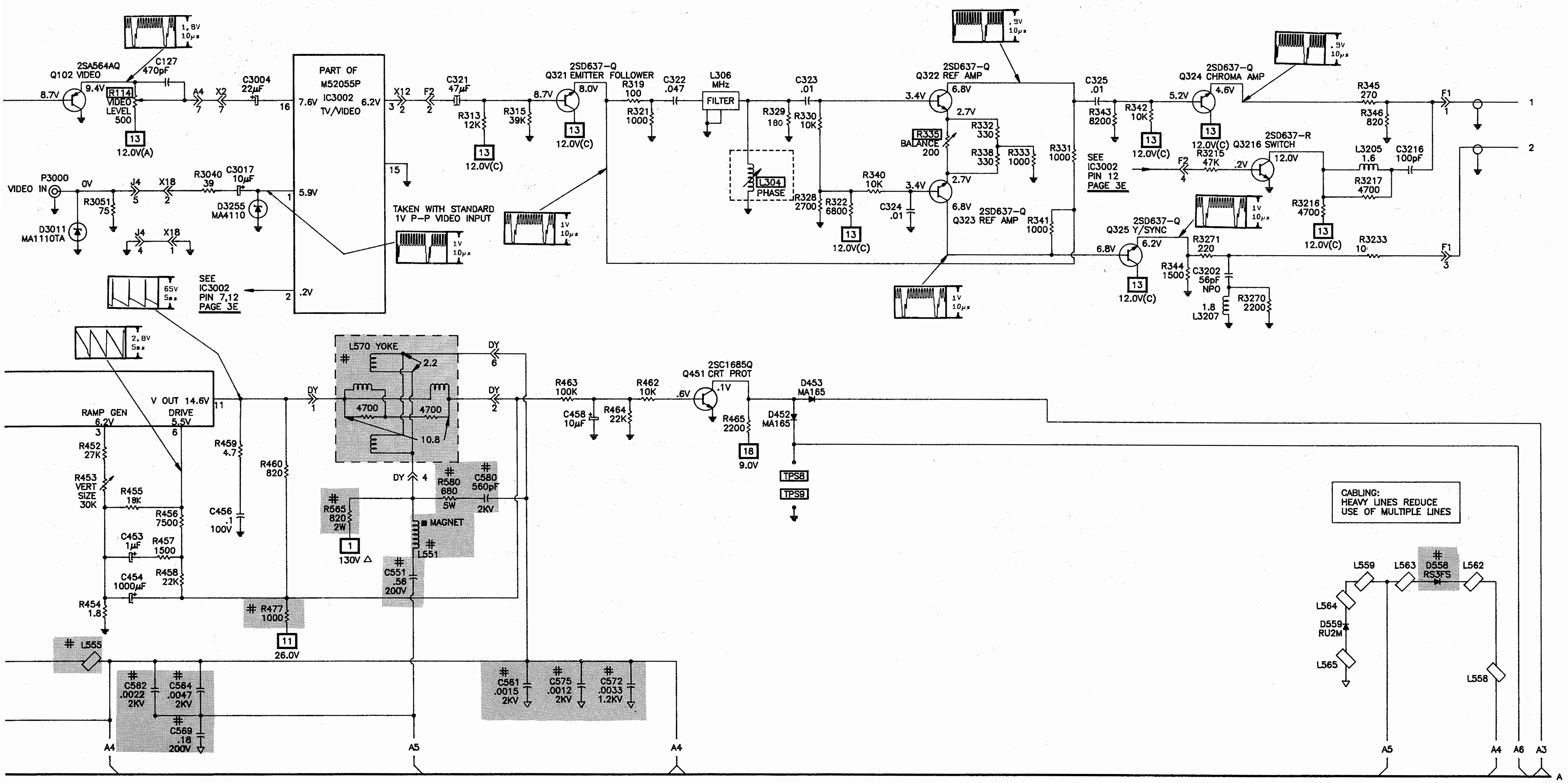

TROUBLESHOOTING continued

If the waveform is missing:

Check the voltages, waveforms and components associated with Chroma Amp Transistor (Q324).

If a chroma waveform is present at pin 15 of IC101, check for the proper waveforms at pins 44, 45, 46 of IC101.

If these wavefoms are missing:

Check the voltages, waveforms and components associated with pins 38, 39 and 41 thru 47 of IC101. Check the 3.58MHz oscillator at pin 39 of IC101. Check the voltages and components associated with pin 40 of IC101.

If there is inadequate tint range check the voltages and components associated with the Sub-Tint Control and pin 42 of IC101.

If the proper waveforms are present at pins 44, 45 and 46 of IC101:
Refer to the "Raster" section of this Troubleshooting guide.

HORIZONTAL

Determine if the TV is in shutdown:

Refer to the "Horizontal Oscillator Disable" section of this troubleshooting guide.

If the TV is not in shutdown, inject a horizontal signal at the base of the Horizontal Output Transistor (Q551). If horizontal deflection is now present:

Check the voltages, waveforms and components associated with Horizontal Drive Transistor (Q501) and pins 4 thru 10 of Video/Chroma Jungle IC (IC101.

If there is still no horizontal deflection:

Check the voltages, waveforms and components associated with Q551 and Horizontal Output Transformer (T551). Check Rectifier Diodes (D541, D552, D554) and associated components for defects.

The High Voltage Rectifier is part of Transformer T551 and if defective will affect the performance of the horizontal circuits.

Horizontal linearity or width problems may be caused by Capacitors C551, C561, C572, C575 and Linearity Coil (L551) being defective.

HORIZONTAL OSCILLATOR DISABLE

The high voltage is monitored by Diode D531, rectifying pulses from the Horizontal Output Transformer (T551). Should the high voltage increase, the rectified voltage at the cathode of Diode D531 will also increase and turn on X-Ray Protect Transistors (Q454, Q531, Q532, Q533). This causes the horizontal oscillator frequency to increase which lowers the high voltages.

To troubleshoot, remove Diode D531. Use a variable AC power supply to supply 90VAC and turn on the set. Slowly increase AC voltage as required to isolate and repair the malfunction.

Return D531 to the circuit.

NOTE: Care should be taken in defeating the high voltage shutdown circuit, as this may cause excessive X-radiation and damage to the CRT, Transformer T551 and associated components. Monitor the high voltage and troubleshoot.

Voltages Taken in Shutdown
IC101
Pin 7 .6V

HORIZONTAL OSCILLATOR DISABLE TEST

Connect the positive lead of a voltmeter to TPD2 and the negative lead to TPD1. Apply 120VAC and turn on set. Normalize Video menu and adjust Brightness to zero. Adjust picture for .9V on voltmeter. Turn set off and place a jumper between pins 3 and 4 of 130V Regulator IC (IC801). Use a variable AC power supply to supply 90VAC to the set. Turn on the set and slowly increase the AC voltage while monitoring the high voltage with a voltage probe. The high voltage should not exceed 34.8KV and the set should lose horizontal sync.
If the high voltage should exceed 34.8KV or the set fails to lose horizontal sync:
Refer to the "Horizontal Oscillator Disable" section of this troubleshooting guide.

VERTICAL

Inject a vertical signal at pin 2 of the Video/Chroma Jungle IC (IC101). If vertical deflection is present:
Check the voltages, waveforms and components associated with pins 2, 12,14 of IC101.

If there is still no vertical deflection:
Check the voltages, waveforms and components associated with the Vertical Output IC (IC451) and CRT Protect Transistor (Q451).

Vertical linearity or height problems may be caused by vertical feedback and bias circuits, check Electrolytics C451 thru C455 and C457 for defects.

SYNC

If horizontal and vertical sync are missing:

Check the voltages, waveforms and components associated with Sync Amp Transistors (Q3102, Q3103, Q3104), and pin 11 of Video/Chroma Jungle IC (IC101).

If there is no vertical sync:
Check the voltages, waveforms and components associated with pins 12 and 14 of IC101.

If there is no horizontal sync:
Check the voltages, waveforms and components associated with pins 4, 6, 8 and 10 of IC101.

TROUBLESHOOTING continued

RASTER

Check the CRT and CRT voltages. If there is no Red:
Check the voltages and components associated with pin 44 of VIF/SIF/AFT/DET/Video/Sync IC (IC101) and the Red Output Transistor (Q351).

If there is no Green:
Check the voltages and components associated with pin 45 of IC101 and the Green Output Transistor (Q352).

If there is no Blue:
Check the voltages and components associated with pin 46 of IC101 and the Blue Output Transistor (Q353).

If raster has height or width problems:
Refer to the "Vertical", "Horizontal", and "Power Supply" sections of this troubleshooting guide.

STEREO/SAP ADJUSTMENTS

All adjustments were made using a B&K model 2009 MTS TV/STEREO generator connected to the antenna terminals, (equivalent generator may be used) with the customer controls set to normal listening levels. Select STEREO mode.

INPUT LEVEL

On generator select PILOT, 1kHz audio frequency, and L-R modulating signal. Connect an oscilloscope to TPE1, low side to ground. Adjust Input Level Control (R2200) for .9V p-p.

L-R LEVEL

On generator select PILOT, lkHz audio frequency, and L-R modulating signal. Connect an oscilloscope to TPE11, low side to ground. Adjust L-R Level Control (R2209) for 600mVp-p.

VCO

On generator select PILOT, 1kHz audio frequency, and L-R modulating signal. Set volume for an audible signal (about 15). Set VCO Control (R2220) fully Counterclockwise. Adjust VCO Control Clockwise until a clear signal is heard.

FILTER

Select SAP mode on the receiver. On generator select SAP, 1kHz audio frequency and L-R modulating signal. Connect an oscilloscope to TPE21 (IC2200, pin 21), low side to ground. Adjust Filter Control (R2221) for MINIMUM.

SEPARATION

On generator select PILOT, 8kHz audio frequency and Left modulating signal. Connect an oscilloscope to TPE10, low side to ground. Adjust Separation Control (R2213) for MINIMUM amplitude of waveform.

TELEVISION SCHEMATIC

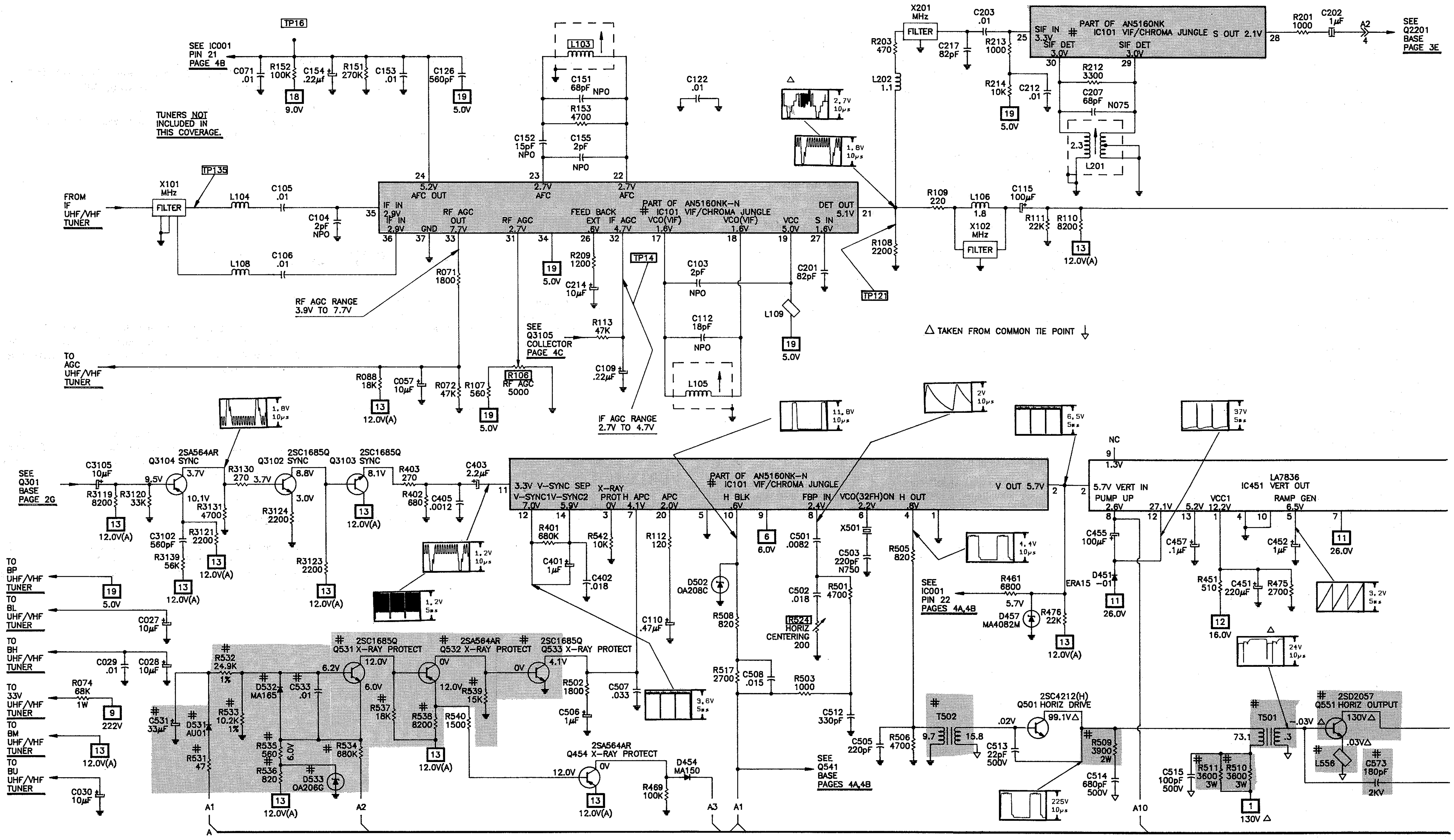

MULTI SOUND DECODER SCHEMATIC

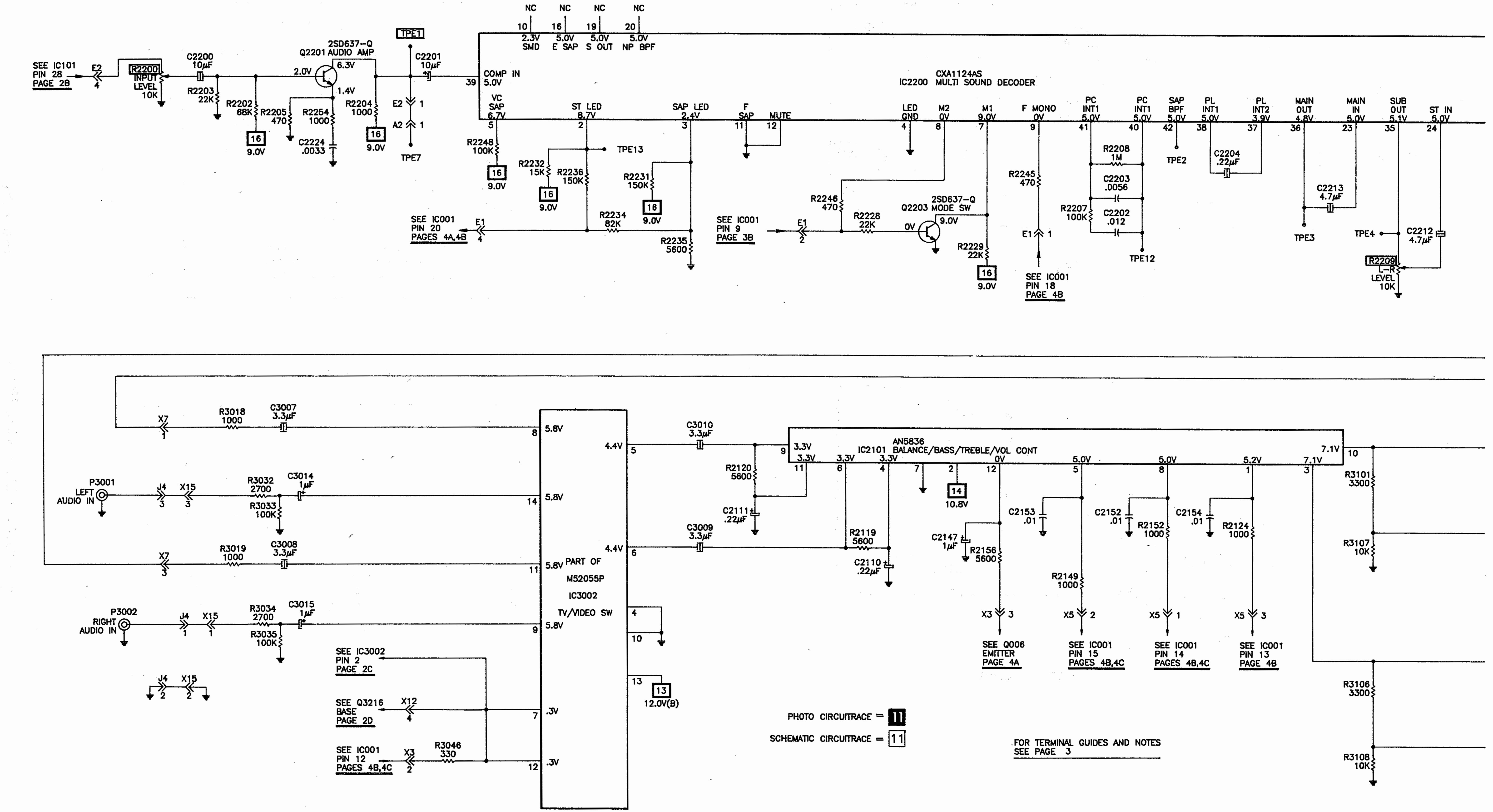

A PHOTOFACT STANDARD NOTATION SCHEMATIC
WITH CIRCUITRACE

© Howard W. Sams & Co. 1992

PLACEMENT CHART continued

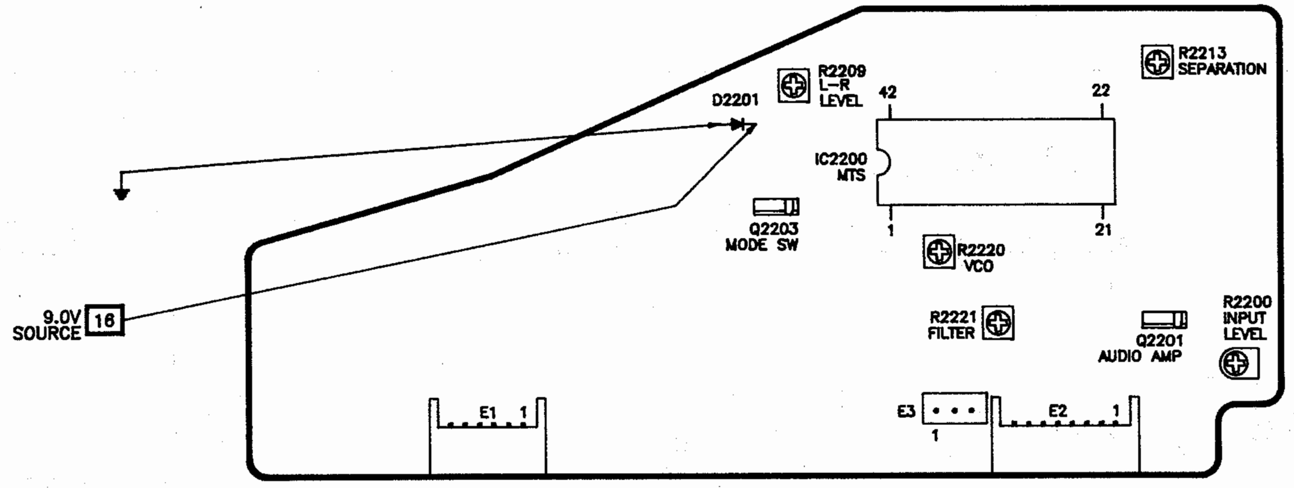

E-STEREO/SAP BOARD

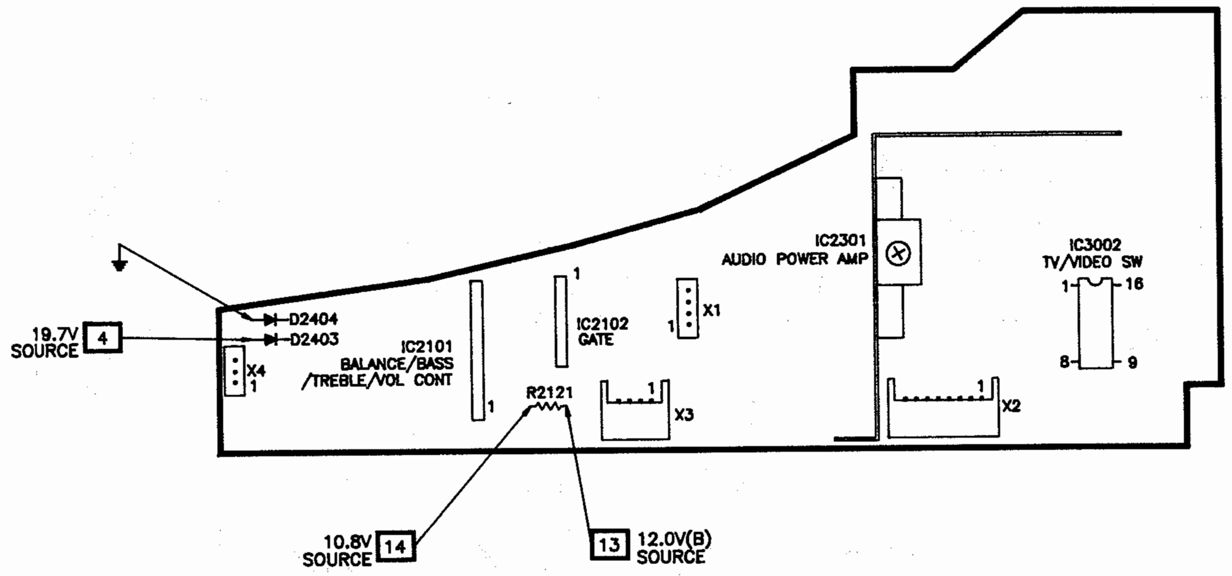

X-TV/VIDEO BOARD

TUNER INFORMATION

TUNER VOLTAGE CHART

	VHF Low Band	VHF High Band	UHF Band
30V	3.7V	7.0V	7.7V
BP	5.0V	5.0V	5.0V
CLK	.1V	.1V	.1V
DATA	.1V	.2V	.2V
ENA	.6V	.6V	.6V
BM	11.9V	11.9V	11.9V
BL	11.7V	4.5V	11.7V
AGC	7.7V	7.7V	7.7V
BH	0V	11.7V	0V
NC	.9V	4.0V	4.8V
BU	.1V	.1V	11.6V

Note: VHF Low Band voltages taken on channel 2.
VHF High Band voltages taken on channel 7.
UHF Band voltages taken on channel 14.

TUNER TERMINAL GUIDE

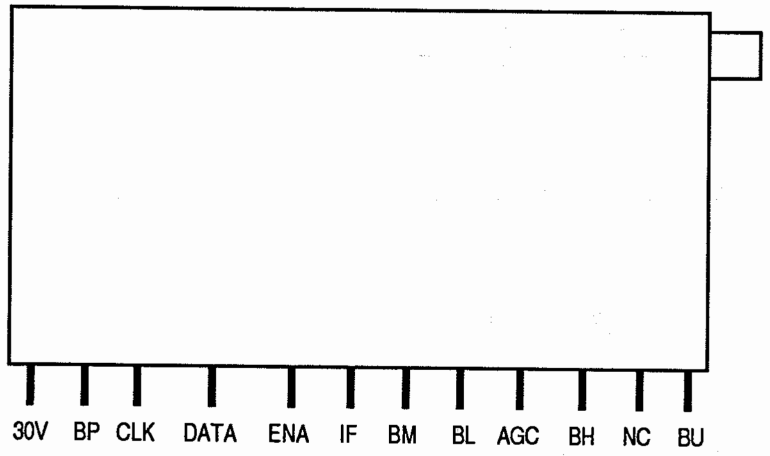

MULTI SOUND DECODER/AUDIO OUTPUT SCHEMATIC

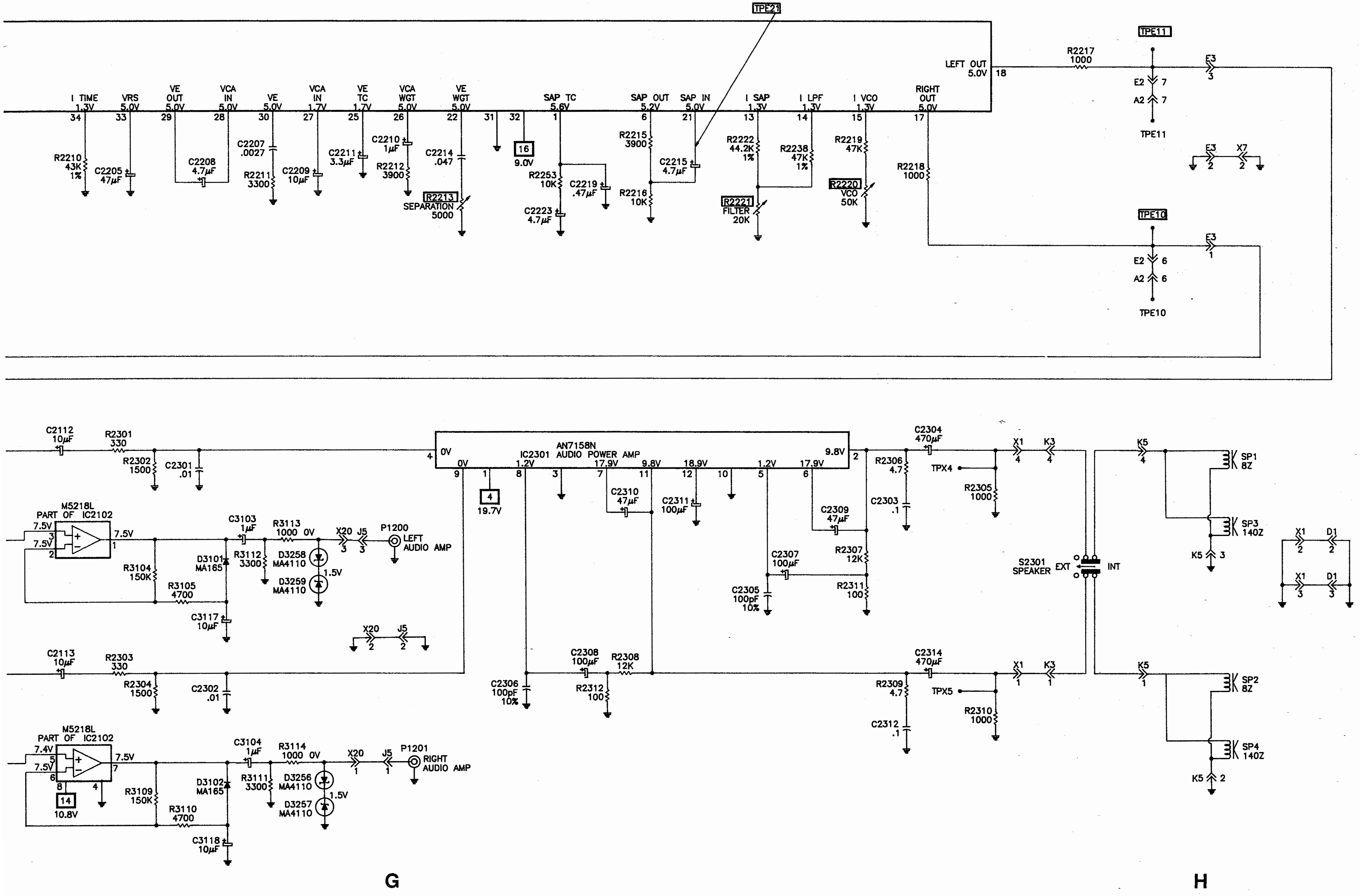

PANASONIC

MODEL CTN-2580S (CHASSIS AEDP200)

PLACEMENT CHART

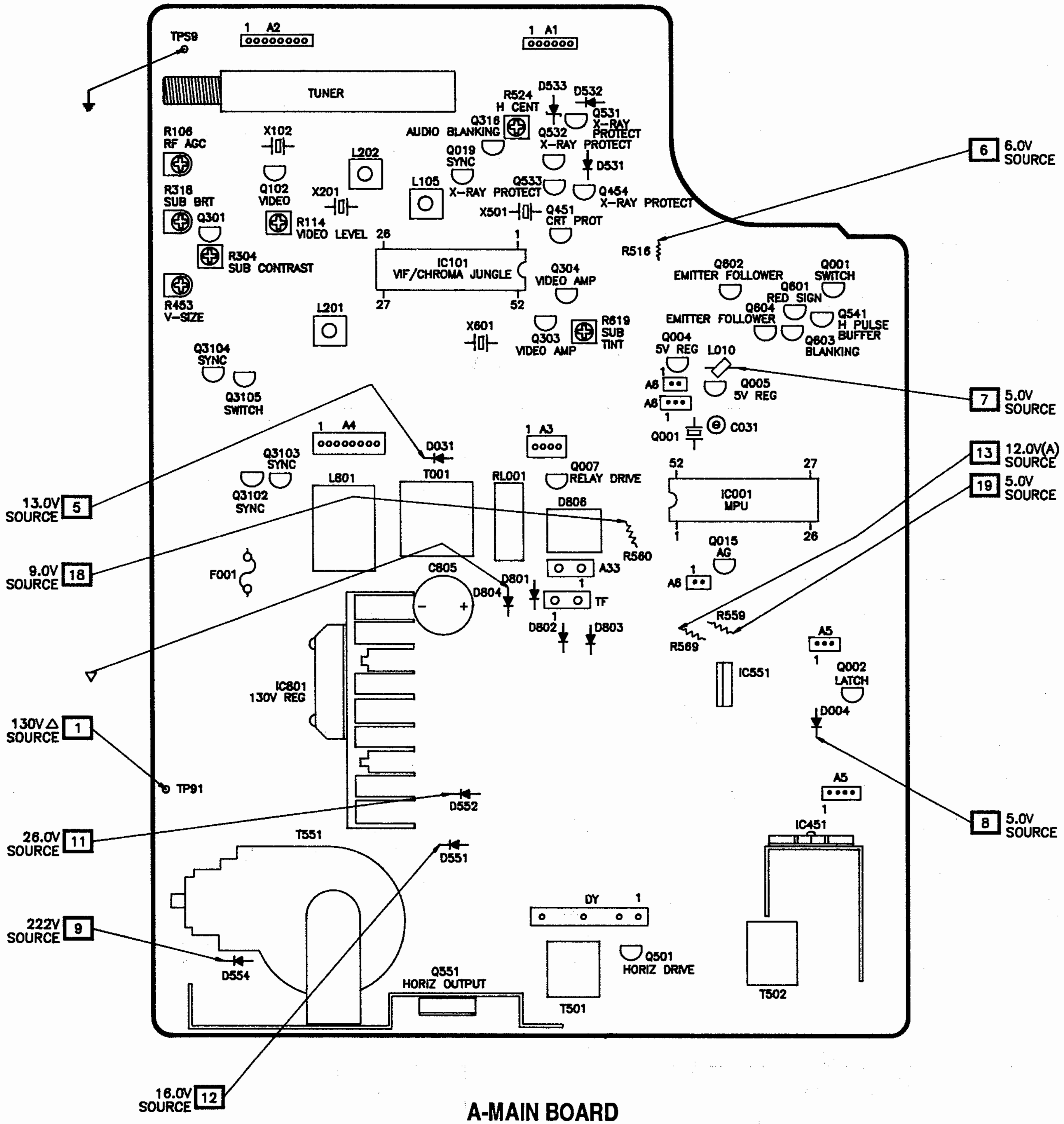

A-MAIN BOARD

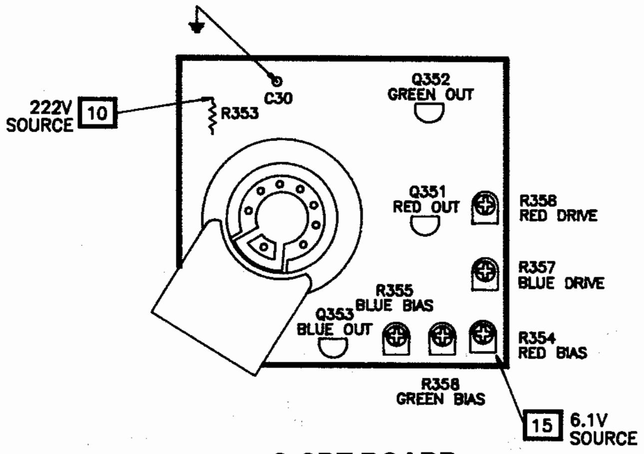

C-CRT BOARD

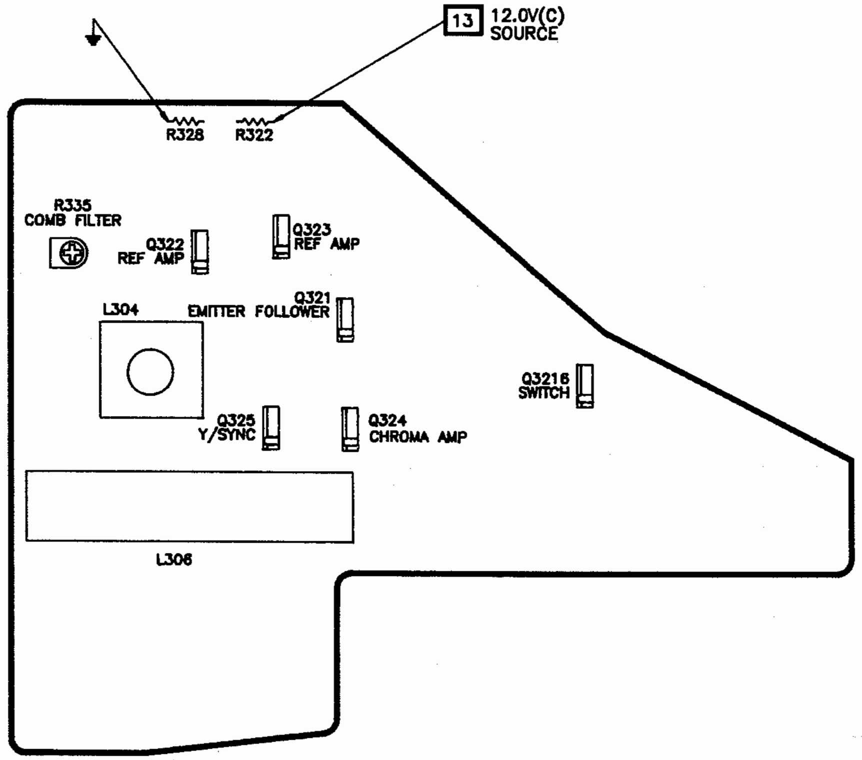

F-COMB FILTER BOARD

A
CRT SCHEMATIC

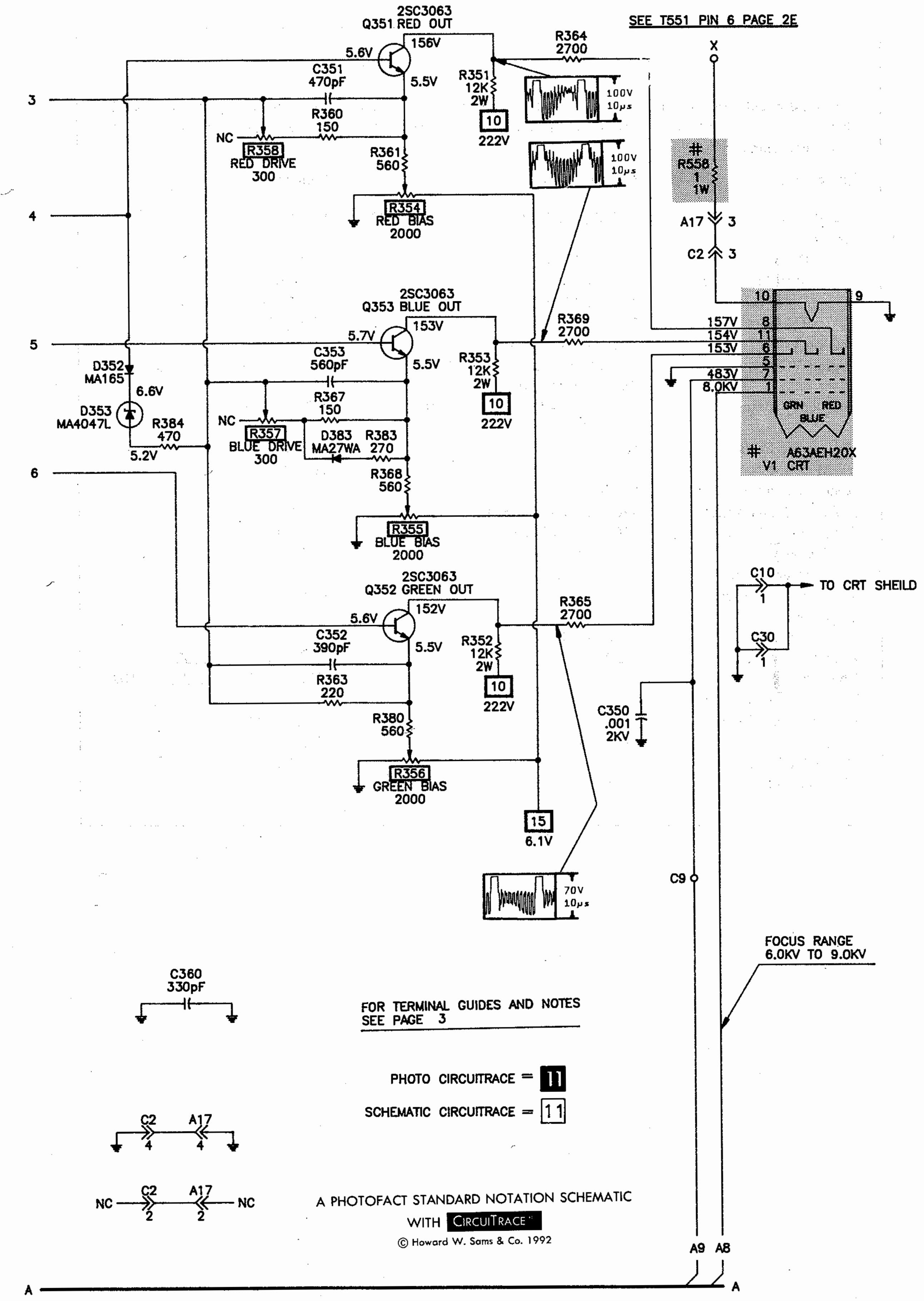

FOR TERMINAL GUIDES AND NOTES SEE PAGE 3

PHOTO CIRCUITRACE = 11

SCHEMATIC CIRCUITRACE = 11

A PHOTOFACT STANDARD NOTATION SCHEMATIC
WITH CIRCUITRACE™

© Howard W. Sams & Co. 1992

B
POWER SUPPLY SCHEMATIC

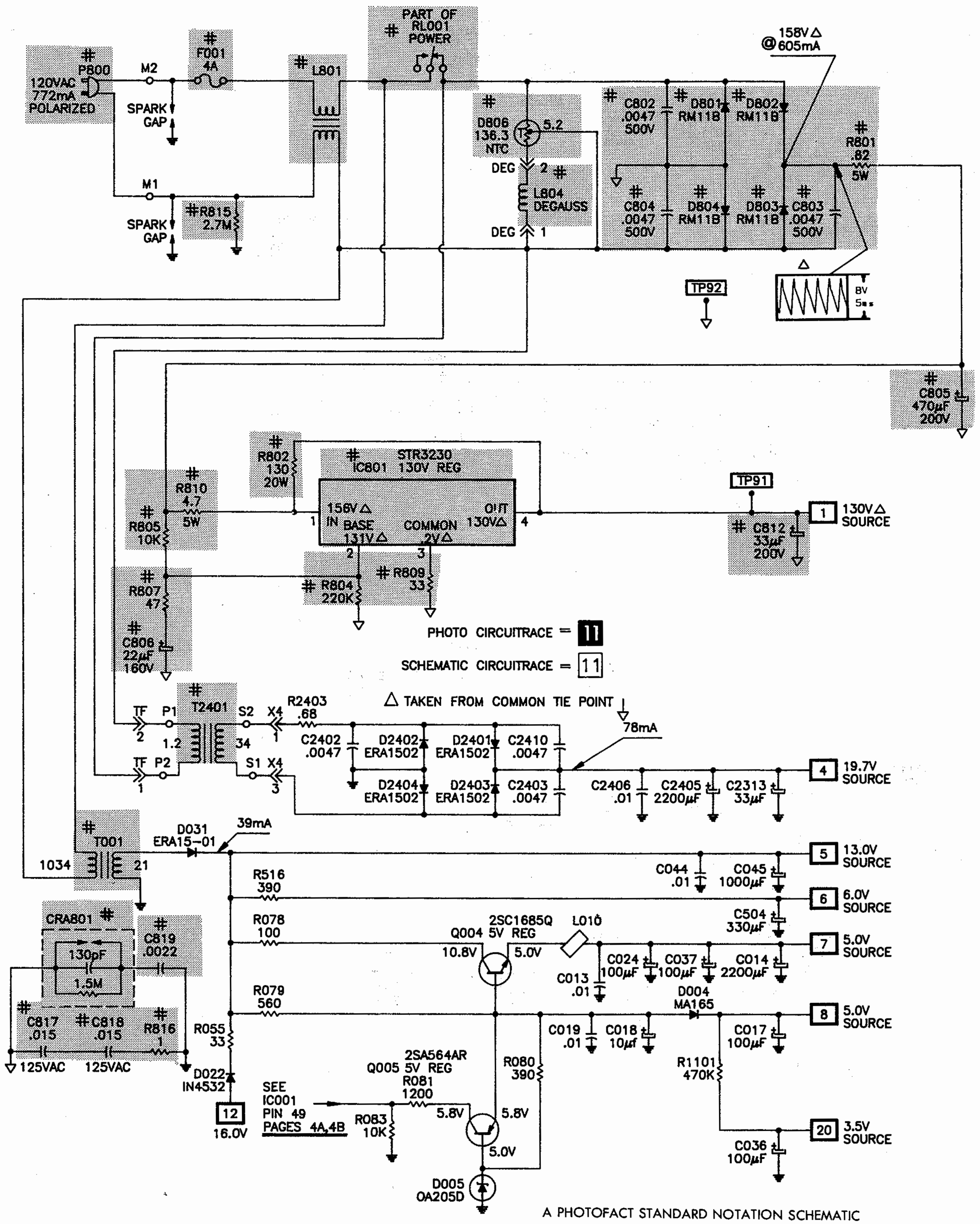

FOR TERMINAL GUIDES AND NOTES SEE PAGE 3

A PHOTOFACT STANDARD NOTATION SCHEMATIC
WITH CIRCUITRACE™

© Howard W. Sams & Co. 1992

C
MPU SCHEMATIC continued

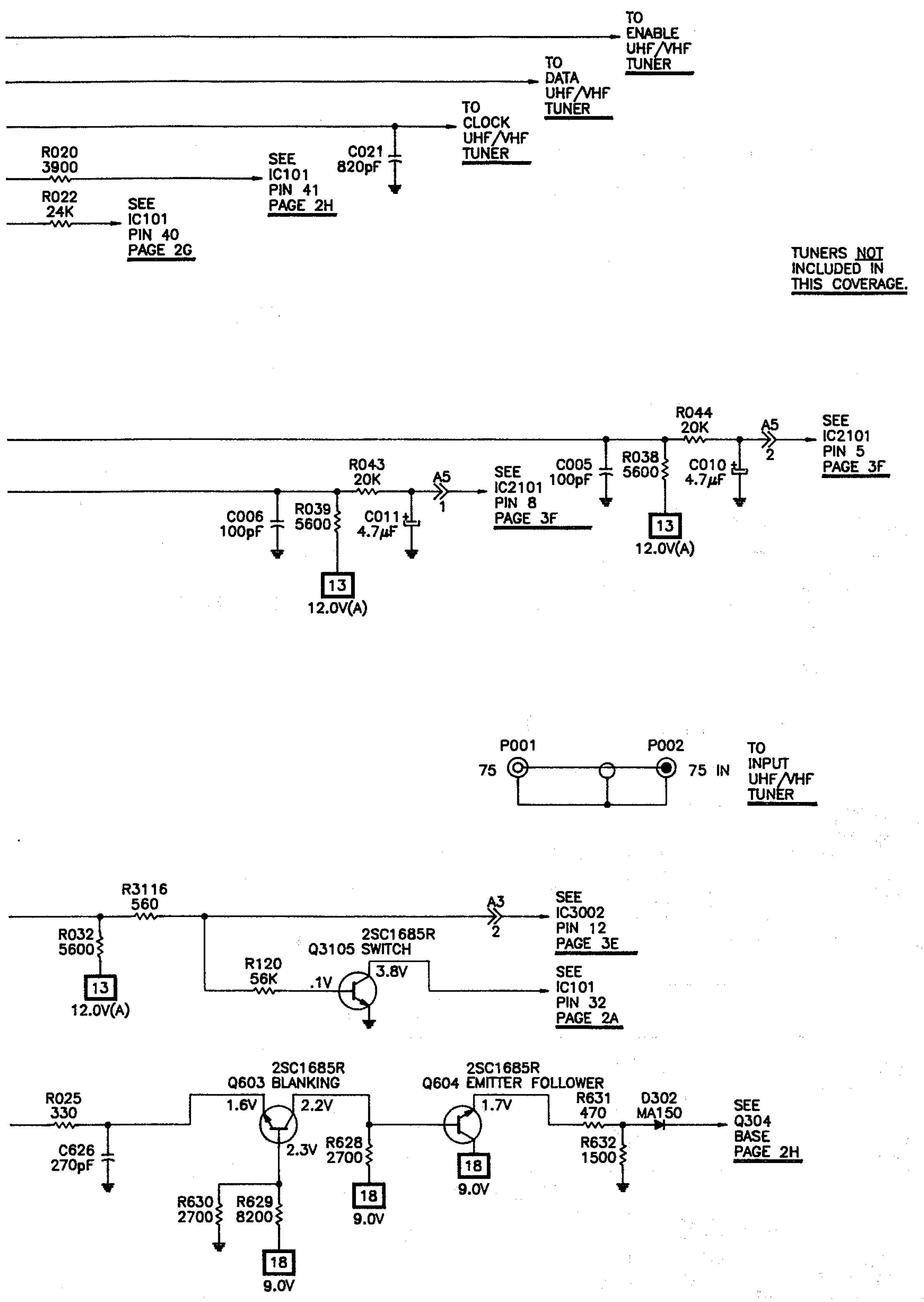

TEST EQUIPMENT

Test equipment listed by participating manufacturers illustrates typical or equivalent equipment used by Sams engineers to obtain measurements. This equipment is compatible with most types used by field service technicians.

Equipment	B&K Precision No.	Sencore No.
Oscilloscope	1541A, 2120, 2125, 2160, 2190, 2522	SC61
Generators		
RGB	1249A, 1260	RG67
Multiburst Signal	1251, 1260	VA62A
Color Bar	1211A, 1249A, 1251, 1260	VA62A, CG25,NT64
TV Stereo	2009	ST65, ST66
Analog VOM	114, 117, 177, 214	-
Digital VOM	377, 388HD, 2700 Series, 2831A, 2860, 2900 Series	DVM37, DVM56A, SC61
Frequency Meter	1803A, 1804A, 1805, 1822, 1851, 1855	FC71, SC61
Hi-Voltage Probe	HV-44	HP200
VOM/DMM	-	TP212
Accessory Probes	PR-28(HV)	-
Isolation Transformer	TR110, 1604, 1653, 1655	PR57
Capacitance Analyzer	810A, 815, 820, 830	LC76, LC101, LC102
CRT Analyzer	480, 490	CR70
Temperature Probe	TP-28, TP-30	-
AC Leakage Tester	1655	PR57
Logic Probe	DP21, DP51	-
Logic Pulser	DP31, DP101	-
Inductance Analyzer	875A	LC76, LC101, LC102
Flyback Yoke Tester	875A	VA62A, LC76, LC101, LC102
TV Stereo Power Monitor	-	SR68
Field Strength Meter	-	FS73, FS74
Transistor Tester	510, 520B, 530	TF46
Video Analyzer	-	VA62A
Modulator/Converter	1201	-

TERMINAL GUIDES AND NOTES

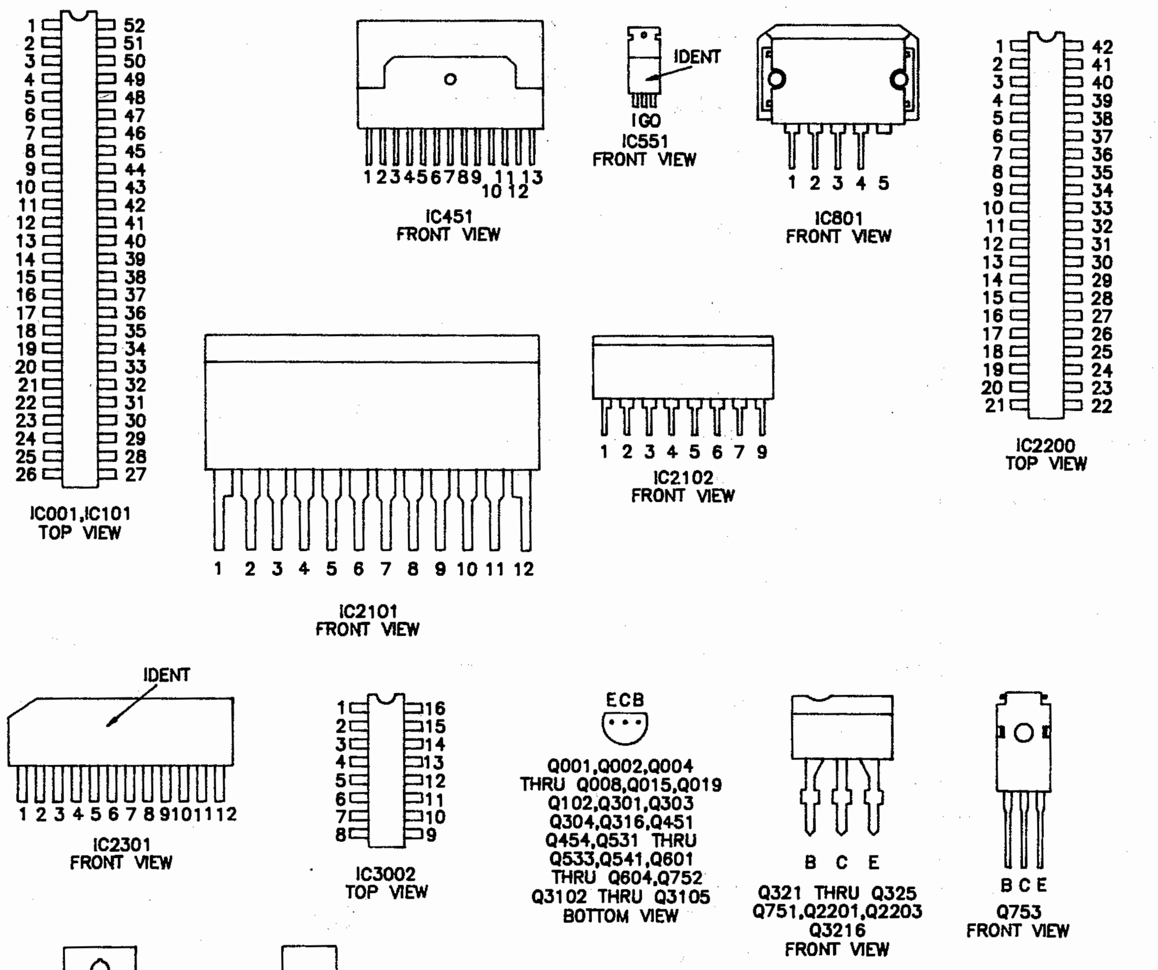

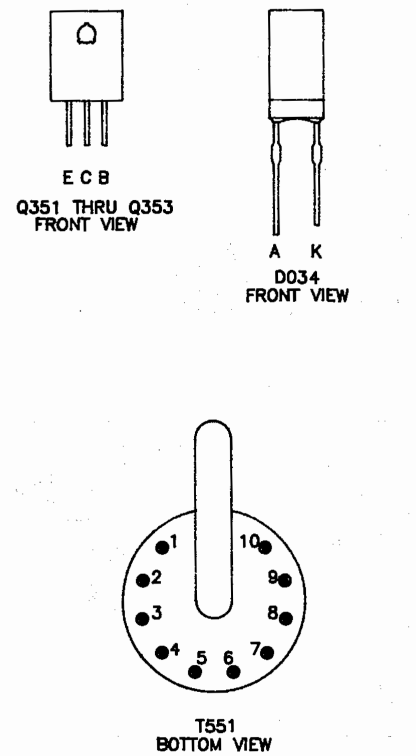

 # For SAFETY use only equivalent replacement part, see parts list.

- —✱— Circuitry not used in some versions
- - - - Circuitry used in some versions
- ✱ Nominal value
- ⏚ Ground
- Chassis
- ▽ Common tie point

Waveforms and voltages are taken from ground, unless noted otherwise.
Waveforms: triggered scope, keyed rainbow generator.
Item numbers in rectangles appear in the alignment/adjustment instructions.
Supply voltage maintained as shown at input.
Voltages measured with digital meter, no signal.
Controls adjusted for normal operation.
Terminal identification may not be found on unit.
Capacitors are 50 volts or less.
5% or greater unless noted.
Electrolytic capacitors are 50 volts or less.
20% or greater unless noted.
Resistors are 1/2W or less.
5% or greater unless noted.
Value in ( ) used in some versions.
Measurements with switching as shown, unless noted.

IC FUNCTIONS

IC2101
AN5836

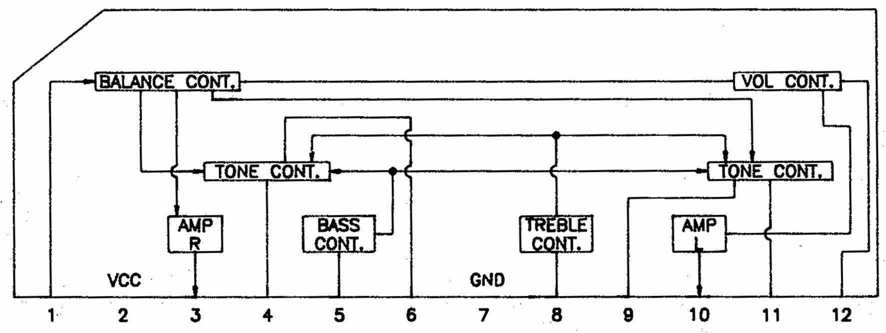

IC2301
AN7158N

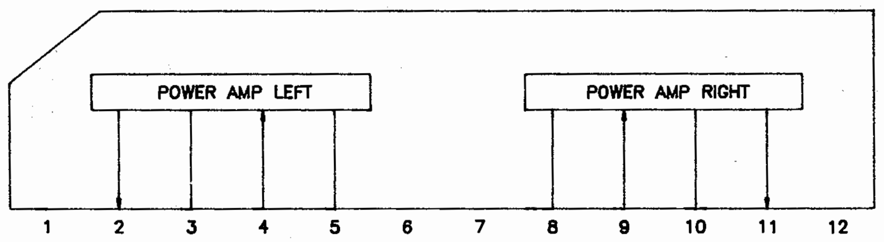

IC3002
M52055P

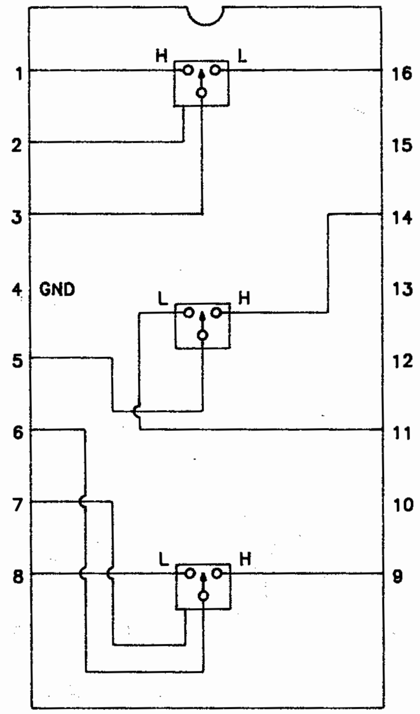

A B

MPU SCHEMATIC

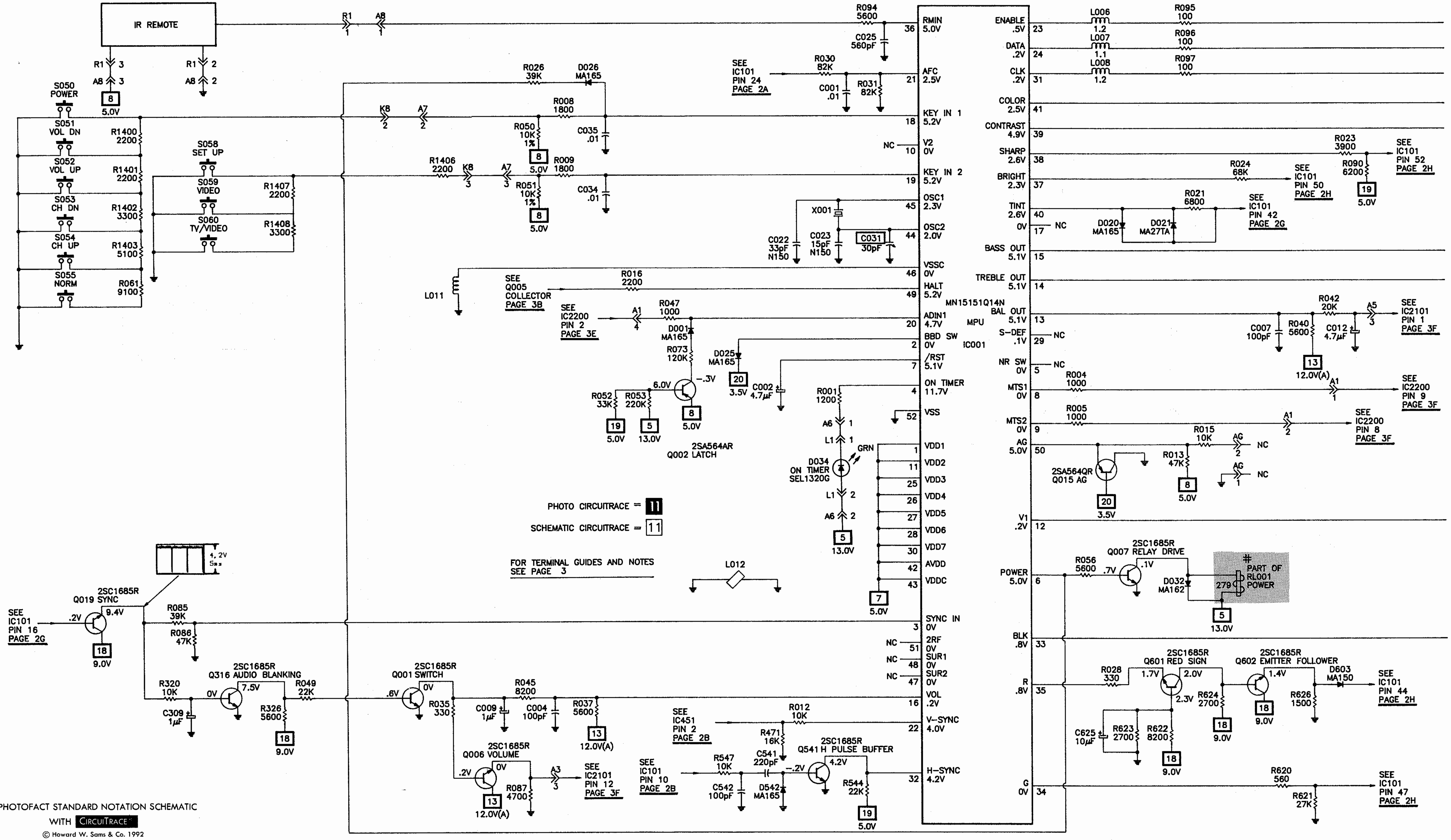

A PHOTOFACT STANDARD NOTATION SCHEMATIC WITH CIRCUITRACE™

© Howard W. Sams & Co. 1992

A-MAIN BOARD

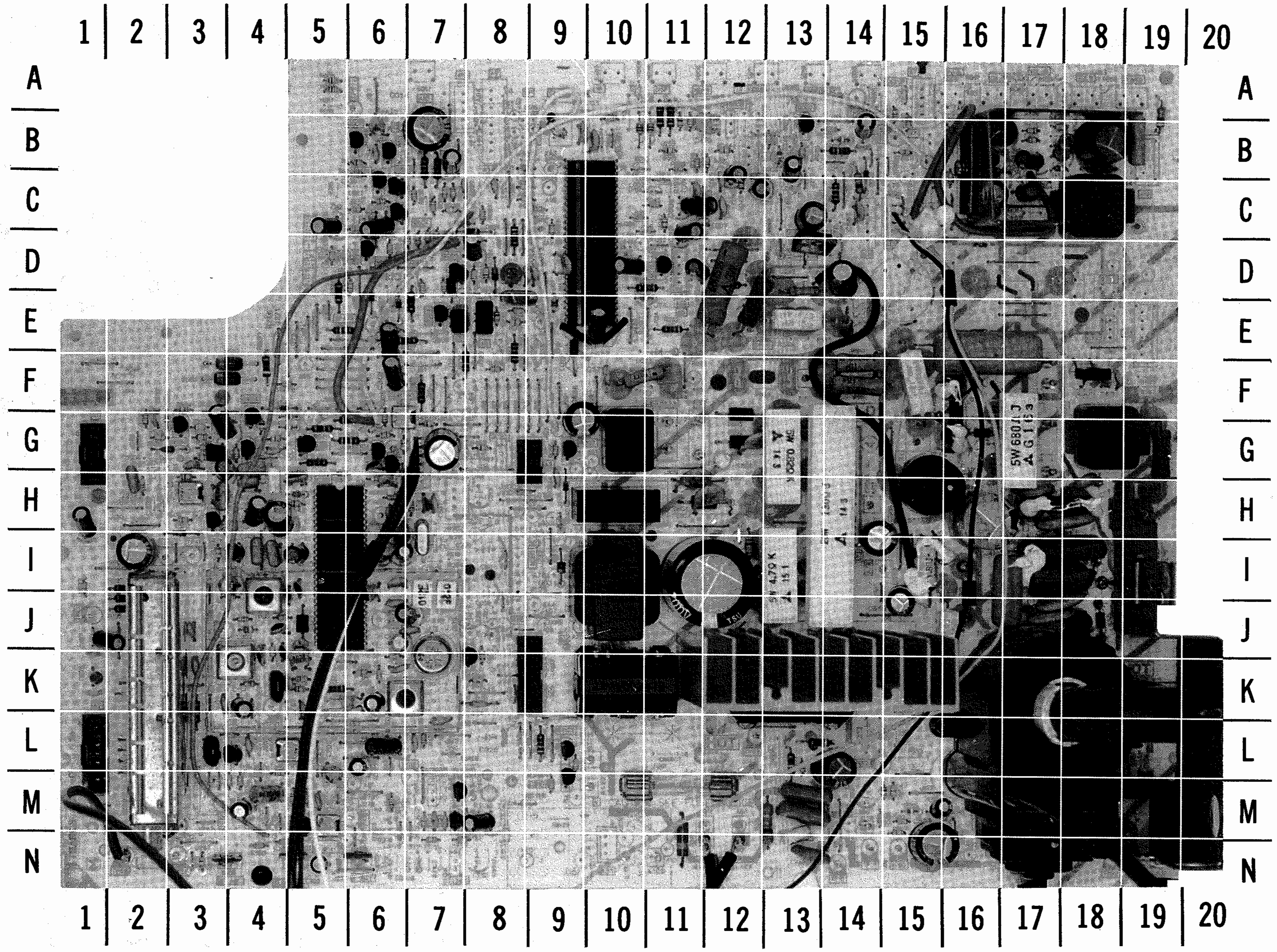

A HOWARD W. SAMS GRIDTRACE™ PHOTO

X-TV/VIDEO BOARD

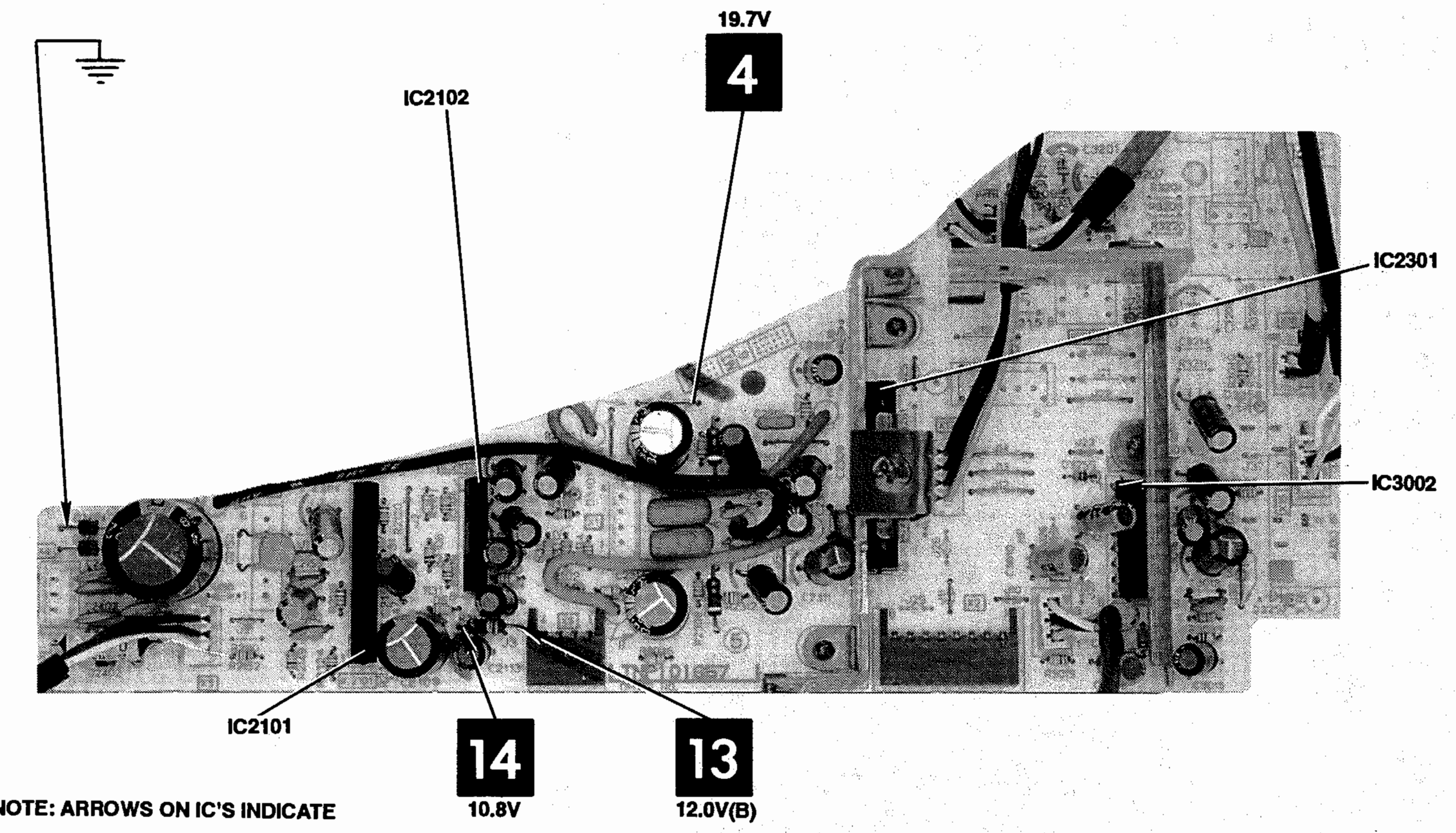

NOTE: ARROWS ON IC'S INDICATE PIN 1 UNLESS NOTED

A HOWARD W. SAMS CircuiTrace PHOTO

X-TV/VIDEO BOARD

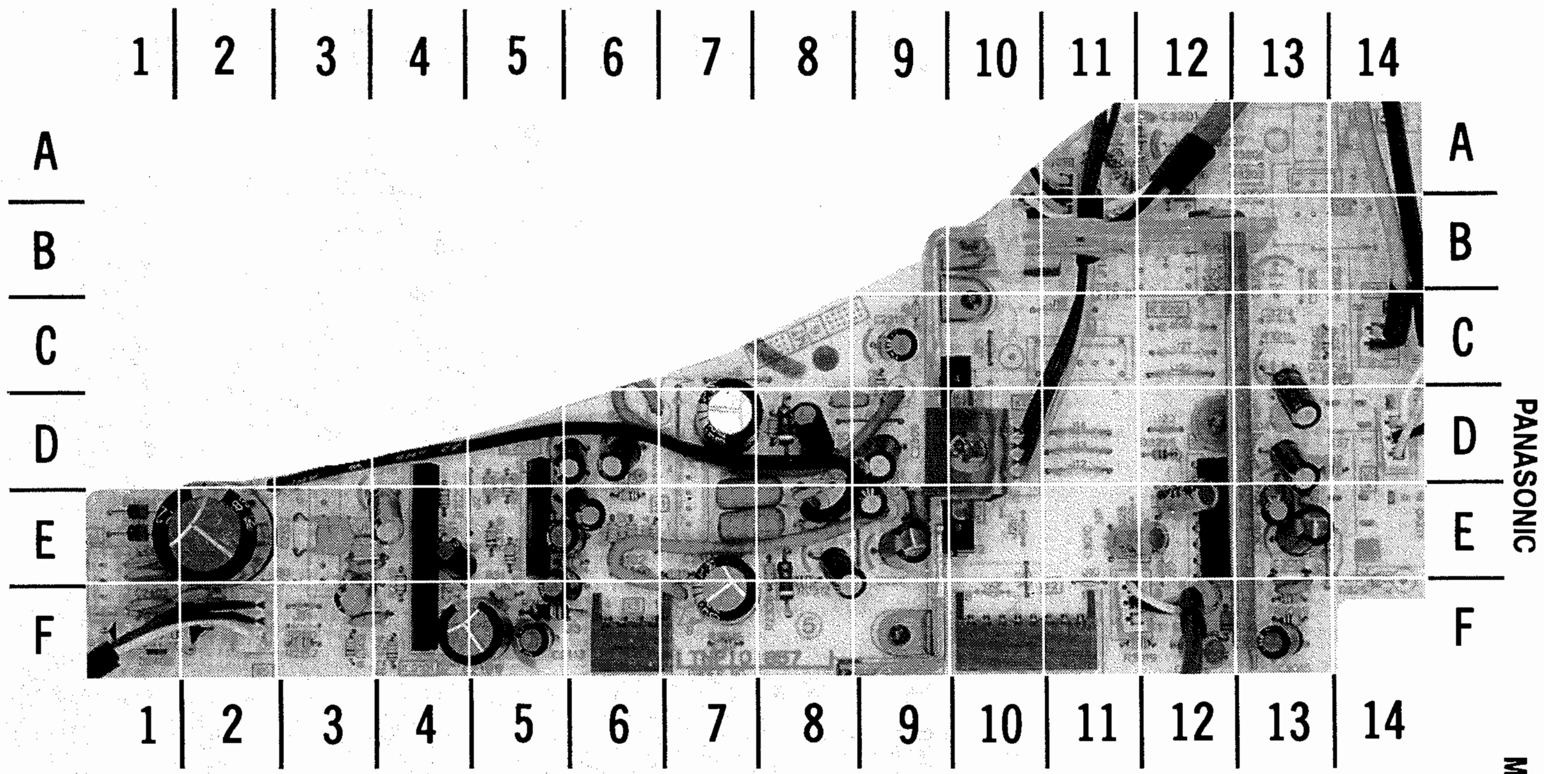

A HOWARD W. SAMS GridTrace™ PHOTO

X-TV/VIDEO BOARD, GRIDTRACE LOCATION GUIDE

C2109	F-5	C2313	C-9	D2401	F-1	R2304	E-9	R3106	F-5
C2110	F-3	C2314	F-7	D2402	F-1	R2305	D-7	R3107	E-4
C2111	E-9	C2402	F-1	D2403	E-1	R2306	D-8	R3108	E-5
C2112	D-6	C2403	E-1	D2404	E-1	R2307	D-8	R3109	E-5
C2113	F-5	C2405	E-2	D3101	D-6	R2308	E-8	R3110	E-6
C2147	E-4	C2406	F-2	D3102	E-6	R2309	F-8	R3111	E-6
C2152	E-3	C2410	E-1	D3255	D-12	R2310	E-7	R3112	E-6
C2153	E-3	C3004	D-13	IC2101	F-4	R2311	D-8	R3113	E-6
C2154	F-3	C3007	F-12	IC2102	D-5	R2312	E-8	R3114	E-6
C2301	D-8	C3008	F-12	IC2301	C-10	R2403	F-1	X1	E-7
C2302	E-9	C3009	E-12	IC3002	D-12	R3018	F-12	X2	F-11
C2303	E-7	C3010	E-11	R2119	F-4	R3019	F-12	X3	F-6
C2304	D-7	C3013	F-13	R2120	E-4	R3032	D-14	X4	F-1
C2305	E-8	C3014	E-13	R2121	F-5	R3033	E-13	X5	F-2
C2306	E-8	C3015	F-13	R2124	F-4	R3034	F-13	X7	F-11
C2307	D-8	C3016	E-13	R2149	F-3	R3035	F-13	X11	A-11
C2308	E-8	C3017	C-13	R2152	F-3	R3040	C-13	X12	D-10
C2309	D-9	C3103	D-6	R2156	F-4	R3046	F-7	X15	D-14
C2310	E-9	C3104	F-5	R2301	D-6	R3101	D-5	X18	C-14
C2311	E-9	C3117	E-6	R2302	C-9	R3104	D-5	X20	B-10
C2312	E-7	C3118	E-5	R2303	E-7	R3105	D-6		

A-MAIN BOARD, GRIDTRACE LOCATION GUIDE

A1	G-1	C122	K-8	C554	I-16	D457	H-5	Q005	D-7	R049	D-5	R316	E-6	R539	G-4	R3130	M-6
A2	M-1	C126	J-5	C555	I-15	D502	I-3	Q006	K-8	R050	A-15	R317	N-3	R540	G-4	R3131	M-7
A3	G-9	C127	L-4	C557	M-16	D531	F-3	Q007	G-9	R051	A-15	R318	N-5	R541	G-5	R3139	N-7
A4	K-9	C151	K-4	C558	G-9	D532	G-3	Q015	D-11	R052	B-14	R320	H-4	R542	H-5	RL001	H-10
A5	B-12	C152	K-4	C559	J-15	D533	G-3	Q019	I-4	R053	B-14	R323	N-4	R544	B-7	T001	I-10
A6	D-11	C153	K-3	C561	J-17	D542	B-6	Q102	L-4	R055	C-14	R324	F-6	R547	B-6	T501	G-18
A7	A-15	C154	K-4	C562	H-18	D551	I-16	Q301	M-5	R056	G-9	R326	H-3	R551	J-16	T502	C-18
A8	E-8	C155	J-4	C564	I-18	D552	I-15	Q303	G-6	R071	K-5	R327	E-7	R552	I-15	T551	K-18
A11	H-7	C201	M-5	C566	I-14	D554	L-19	Q304	G-6	R072	I-1	R334	D-5	R554	M-15	TF	G-11
A17	C-15	C202	L-5	C567	C-14	D555	M-15	Q316	H-3	R073	B-13	R336	B-7	R555	M-15	TP13	G-6
AG	E-7	C203	K-5	C569	I-17	D556	N-16	Q451	G-5	R074	D-13	R337	H-6	R556	M-14	TP14	K-6
C001	B-12	C207	K-6	C570	C-13	D557	F-3	Q454	G-4	R078	F-8	R339	F-6	R557	M-15	TP16	I-2
C002	D-10	C212	K-5	C571	F-10	D558	H-17	Q501	F-18	R079	C-14	R401	I-5	R558	E-13	TP91	N-14
C004	C-11	C214	K-6	C572	J-17	D559	F-16	Q531	G-3	R080	D-7	R402	L-7	R559	D-12	TP92	N-18
C005	C-12	C217	K-5	C573	H-18	D560	F-3	Q532	G-3	R081	D-8	R403	K-8	R560	F-10	TP121	J-4
C006	B-12	C301	M-4	C575	J-17	D603	E-6	Q533	G-4	R083	D-8	R451	B-16	R565	F-15	TP135*	J-7
C007	C-11	C302	B-7	C576	D-14	D801	H-11	Q541	B-6	R085	I-4	R452	B-15	R569	E-12	X001	E-8
C009	C-11	C303	N-5	C580	H-17	D802	G-12	Q551	I-19	R086	I-3	R453	N-6	R570	M-15	X101	K-7
C010	B-12	C305	L-6	C601	L-7	D803	F-12	Q601	C-6	R087	K-8	R454	B-18	R575	E-14	X102	L-3
C011	C-12	C306	E-6	C605	H-7	D804	H-12	Q602	D-6	R088	K-2	R455	B-17	R580	G-17	X201	K-4
C012	C-11	C307	F-6	C606	I-6	D806	G-10	Q603	C-6	R090	D-7	R456	B-16	R604	I-6	X501	H-4
C013	D-9	C309	H-4	C607	H-7	DEG	G-11	Q604	C-6	R092	F-7	R457	B-17	R609	H-7	X601	I-7
C014	B-7	C310	I-6	C608	H-6	DY	F-17	Q3102	M-9	R093	C-7	R458	B-17	R610	H-6		
C017	B-14	C312	I-6	C609	H-6	F001	M-10	Q3103	L-9	R094	D-8	R459	A-19	R611	H-6	* LOCATED ON	
C018	B-13	C314	G-6	C610	C-5	IC001	E-10	Q3104	M-7	R095	J-2	R460	B-19	R615	E-7	BOTTOM OF	
C019	C-12	C401	I-5	C625	C-6	IC101	K-7	Q3105	M-7	R096	J-2	R461	B-11	R616	G-6	BOARD	
C021	J-3	C402	I-4	C626	C-8	IC451	B-16	R001	D-10	R097	I-2	R462	G-8	R617	C-7		
C022	D-9	C403	L-6	C802	H-11	IC551	D-13	R004	A-5	R106	N-4	R463	B-17	R618	G-7		
C023	D-9	C405	L-7	C803	G-12	IC801	L-12	R005	A-5	R107	M-4	R464	C-17	R619	G-6		
C024	D-8	C451	B-16	C804	H-12	L006	B-11	R008	A-11	R108	J-4	R465	G-15	R620	B-6		
C025	C-7	C452	B-16	C805	I-12	L007	B-10	R009	A-11	R109	J-4	R469	G-4	R621	C-6		
C026	I-2	C453	B-17	C806	L-14	L008	B-8	R012	B-11	R110	M-4	R471	B-11	R622	C-6		
C027	H-1	C454	B-18	C812	H-16	L010	D-7	R013	E-8	R111	M-4	R473	B-16	R623	C-6		
C028	K-1	C455	C-16	C817	N-13	L011	E-9	R015	E-8	R112	J-4	R475	B-16	R624	C-6		
C029	M-2	C456	B-19	C818	M-13	L012	E-9	R016	E-8	R113	K-6	R476	F-4	R626	D-6		
C030	M-3	C457	C-17	C819	M-13	L103	K-4	R020	C-7	R114	L-5	R501	H-3	R628	D-7		
C031	D-8	C458	B-17	C3102	M-7	L104	J-7	R021	D-8	R120	L-9	R502	G-4	R629	D-7		
C034	B-9	C501	H-4	C3105	M-8	L105	J-4	R022	C-9	R151	K-4	R503	H-3	R630	C-7		
C035	B-10	C502	H-3	CRA801	N-13	L106	L-3	R023	C-8	R152	K-3	R505	G-5	R631	D-7		
C036	D-11	C503	H-5	D001	B-13	L108	J-7	R024	C-9	R153	K-4	R506	G-4	R632	D-7		
C037	E-10	C504	H-4	D004	B-14	L109	J-5	R025	C-8	R201	M-5	R508	H-3	R801	G-13		
C044	H-9	C505	G-4	D005	D-8	L201	K-6	R026	B-9	R203	K-4	R509	G-19	R802	H-14		
CO45	G-7	C506	G-3	D020	C-8	L202	J-4	R028	C-8	R209	K-6	R510	F-14	R804	L-13		
C057	J-1	C507	G-4	D021	C-8	L551	H-15	R030	B-10	R212	K-6	R511	F-14	R805	I-12		
C071	K-3	C508	H-2	D022	B-14	L555	J-18	R031	B-13	R213	K-5	R513	I-4	R807	L-13		
C103	I-5	C512	G-3	D025	E-10	L556	I-19	R032	E-11	R214	K-5	R516	E-5	R809	L-13		
C104	I-6	C513	F-18	D026*	B-10	L558	I-18	R035	E-8	R303	M-5	R517	H-2	R810	I-13		
C105	J-6	C514	G-19	D031	I-9	L559	G-16	R037	B-12	R304	M-5	R524	H-3	R815	N-11		
C106	I-6	C515	F-19	D032	H-9	L562	H-18	R038	B-11	R305	D-6	R531	F-4	R816	M-13		
C109	J-6	C518	I-4	D302	E-6	L563	H-17	R039	B-11	R306	G-6	R532	G-3	R1101	D-12		
C110	I-4	C531	G-3	D304	G-6	L564	G-16	R040	C-12	R307	G-6	R533	G-3	R3116	F-8		
C112	I-5	C533	G-2	D451	B-16	L565	F-16	R042	C-11	R308	N-4	R534	F-3	R3119	N-7		
C115	M-4	C541	B-6	D452	G-6	L801	K-10	R043	C-12	R309	C-7	R535	G-2	R3120	M-8		
C119	K-6	C542	B-6	D453	G-5	Q001	B-6	R044	B-12	R310	H-6	R536	G-2	R3121	M-7		
C120	J-7	C551	E-16	D454	F-4	Q002	B-13	R045	C-11	R311	G-6	R537	G-3	R3123	L-9		
C121	J-7	C553	N-15	D455	B-15	Q004	E-7	R047	B-11	R314	G-6	R538	G-3	R3124	M-9		

E-STEREO/SAP BOARD

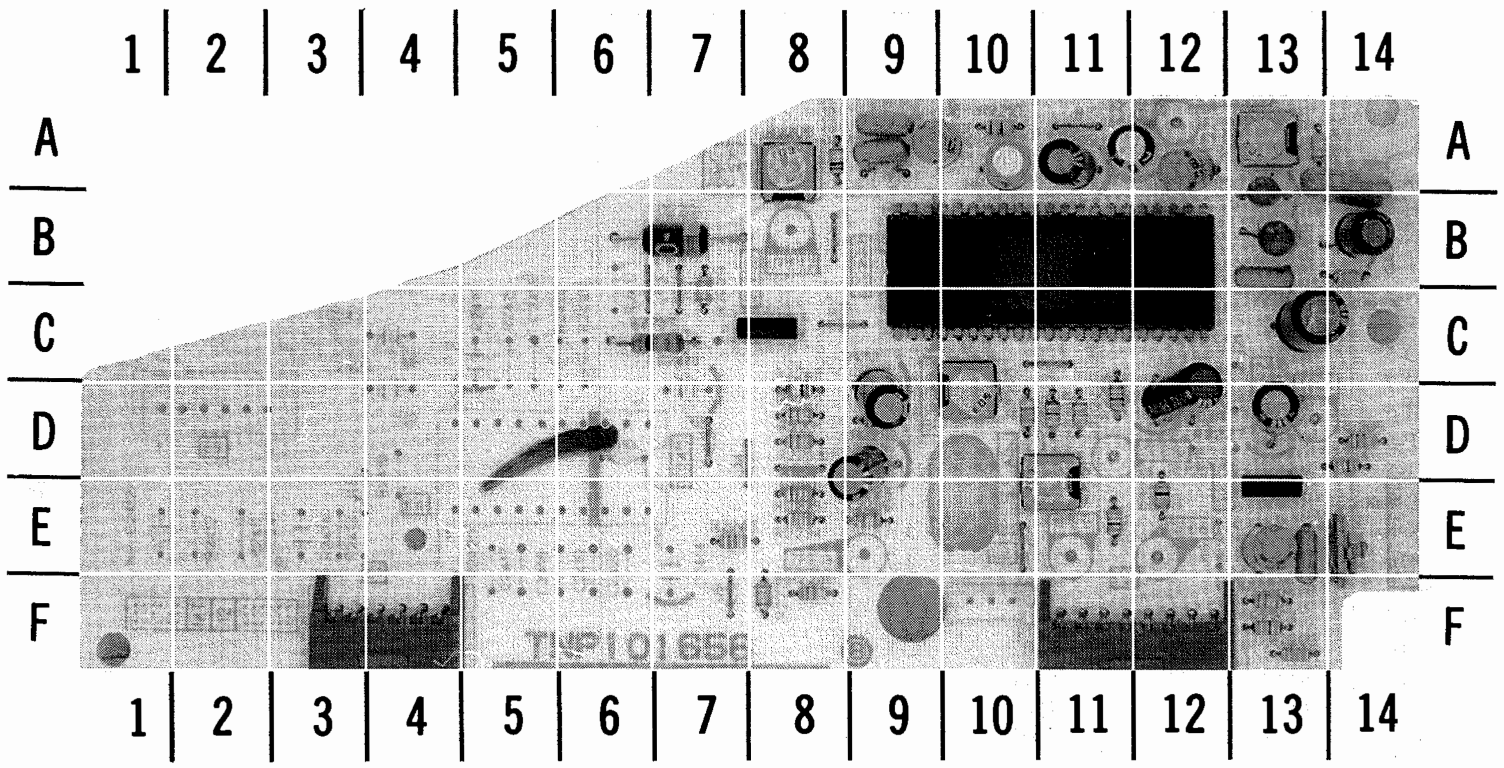

A HOWARD W. SAMS GRIDTRACE™ PHOTO

F-COMB FILTER BOARD

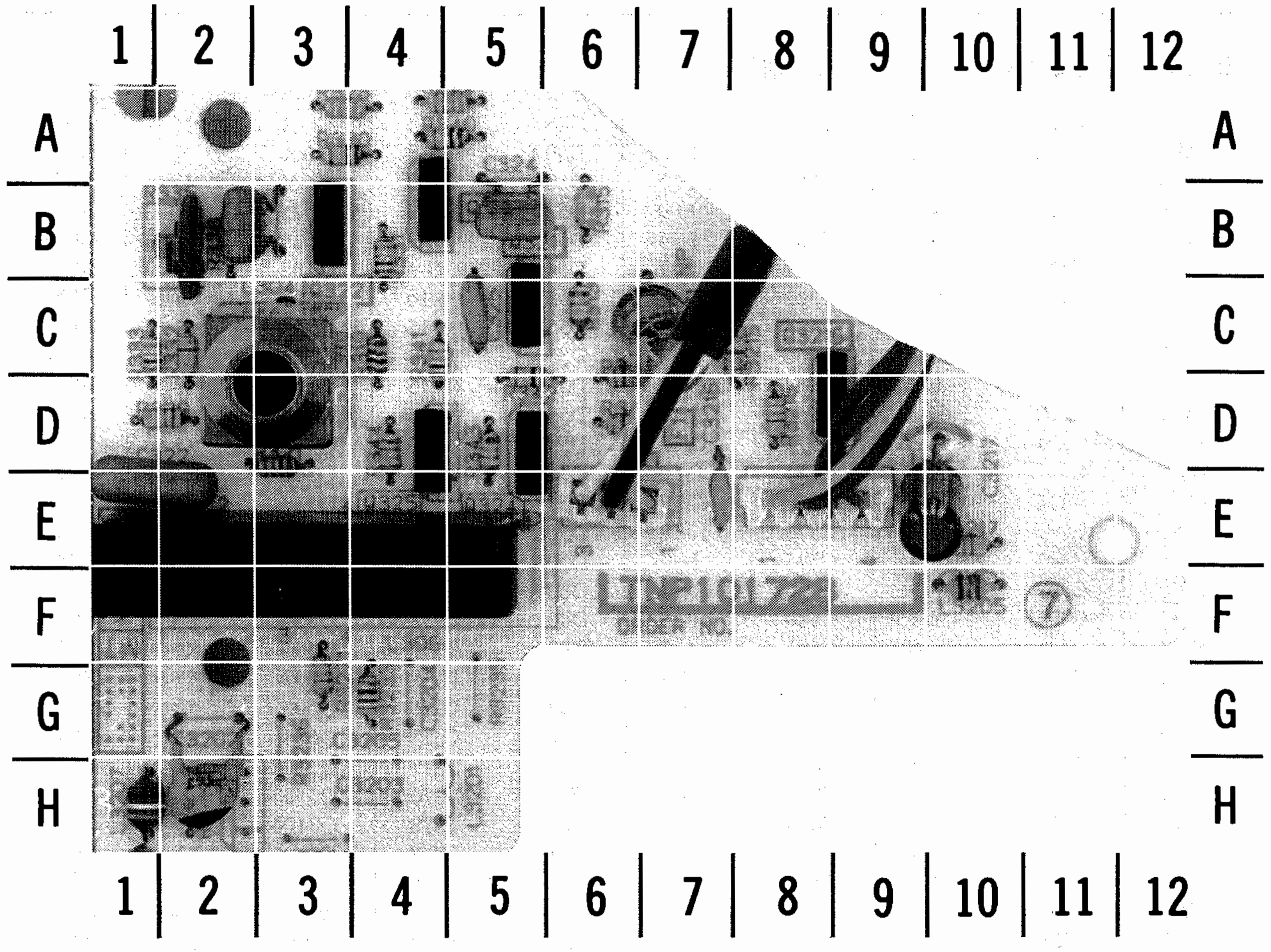

A HOWARD W. SAMS GRIDTRACE™ PHOTO

E-STEREO/SAP BOARD, GRIDTRACE LOCATION GUIDE

C2200	E-13	C2213	A-12	R2200	E-14	R2216	E-12	R2236	E-9
C2201	D-13	C2214	A-14	R2202	F-13	R2217	E-11	R2237	C-7
C2202	A-9	C2215	D-12	R2203	F-13	R2218	D-11	R2238	D-11
C2203	A-9	C2219	D-9	R2204	F-13	R2219	D-10	R2245	E-7
C2204	A-9	C2223	D-9	R2205	D-14	R2220	D-10	R2246	F-8
C2205	A-11	C2224	E-13	R2207	A-8	R2221	E-11	R2248	D-8
C2206	C-13	D2201	B-7	R2208	A-9	R2222	D-11	R2253	D-9
C2207	B-13	E1	F-4	R2209	A-8	R2228	F-8	R2254	D-14
C2208	A-11	E2	F-10	R2210	A-10	R2229	C-7	TPE1	D-1
C2209	B-13	E3	F-12	R2211	B-14	R2231	D-8	TPE10	D-11
C2210	B-14	IC2200	C-9	R2212	A-13	R2232	D-8	TPE11	E-11
C2211	B-13	Q2201	E-13	R2213	A-13	R2234	E-8	TPE13	E-9
C2212	A-10	Q2203	C-8	R2215	D-12	R2235	E-8	TPE21	C-12

F-COMB FILTER BOARD, GRIDTRACE LOCATION GUIDE

C321	C-7	L304	D-3	R313	C-6	R333	C-1	R3215	C-8
C322	E-1	L306	F-4	R315	B-6	R335	B-2	R3216	D-8
C323	B-3	L3205	F-10	R319	C-4	R338	B-2	R3217	E-10
C324	B-5	L3207	H-1	R321	D-3	R340	A-5	R3233	G-4
C325	C-5	Q321	C-6	R322	A-5	R341	C-4	R3270	H-2
C3202	G-2	Q322	B-3	R328	A-3	R342	D-5	R3271	G-3
C3216	E-7	Q323	A-4	R329	D-2	R343	D-5		
C3217	E-10	Q324	D-5	R330	A-3	R344	D-4		
F1	E-7	Q325	D-4	R331	B-4	R345	D-6		
F2	E-8	Q3216	C-9	R332	C-2	R346	D-6		

A-MAIN BOARD

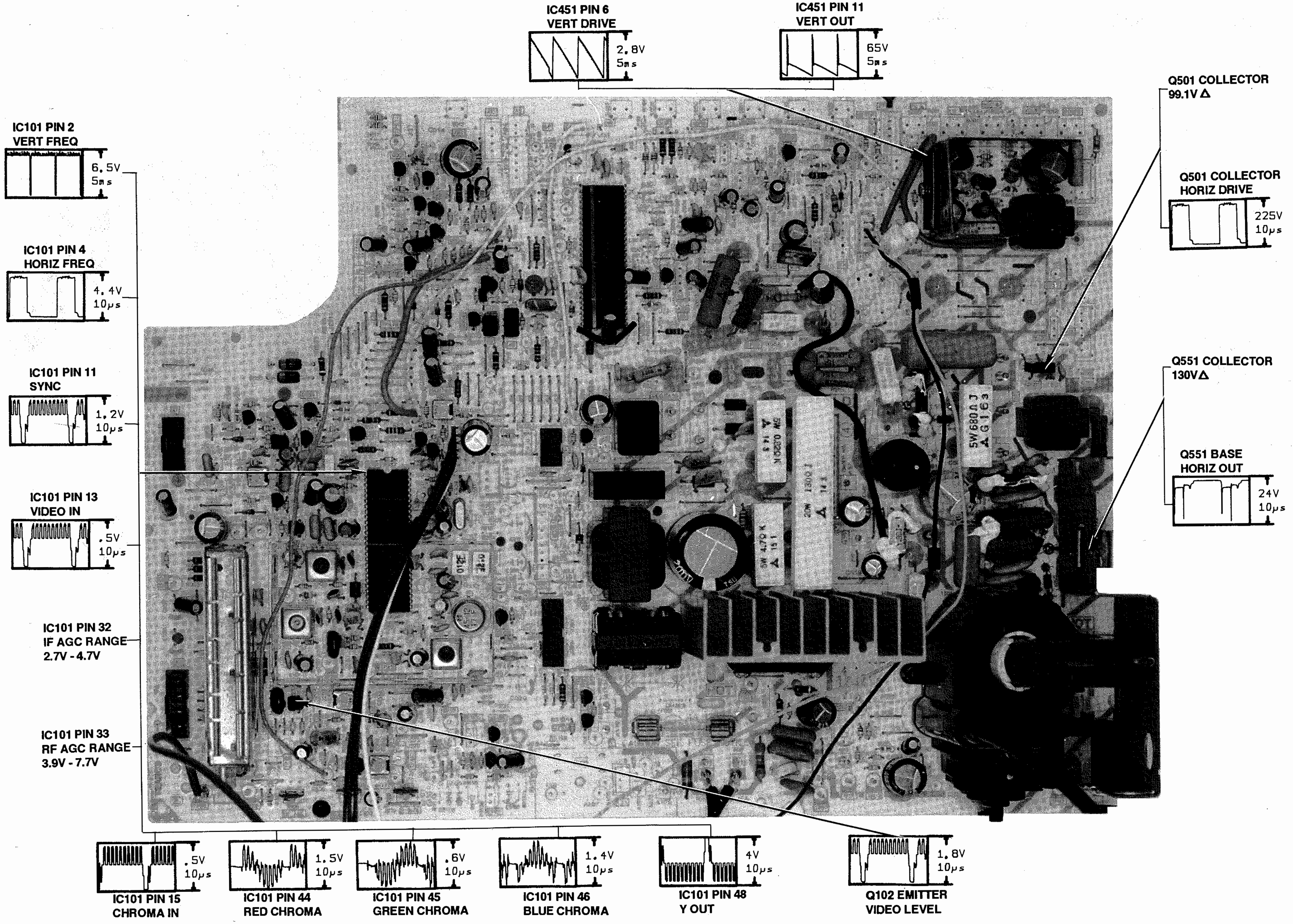

A HOWARD W. SAMS QUICK-CHECKS™ PHOTO

E-STEREO/SAP BOARD

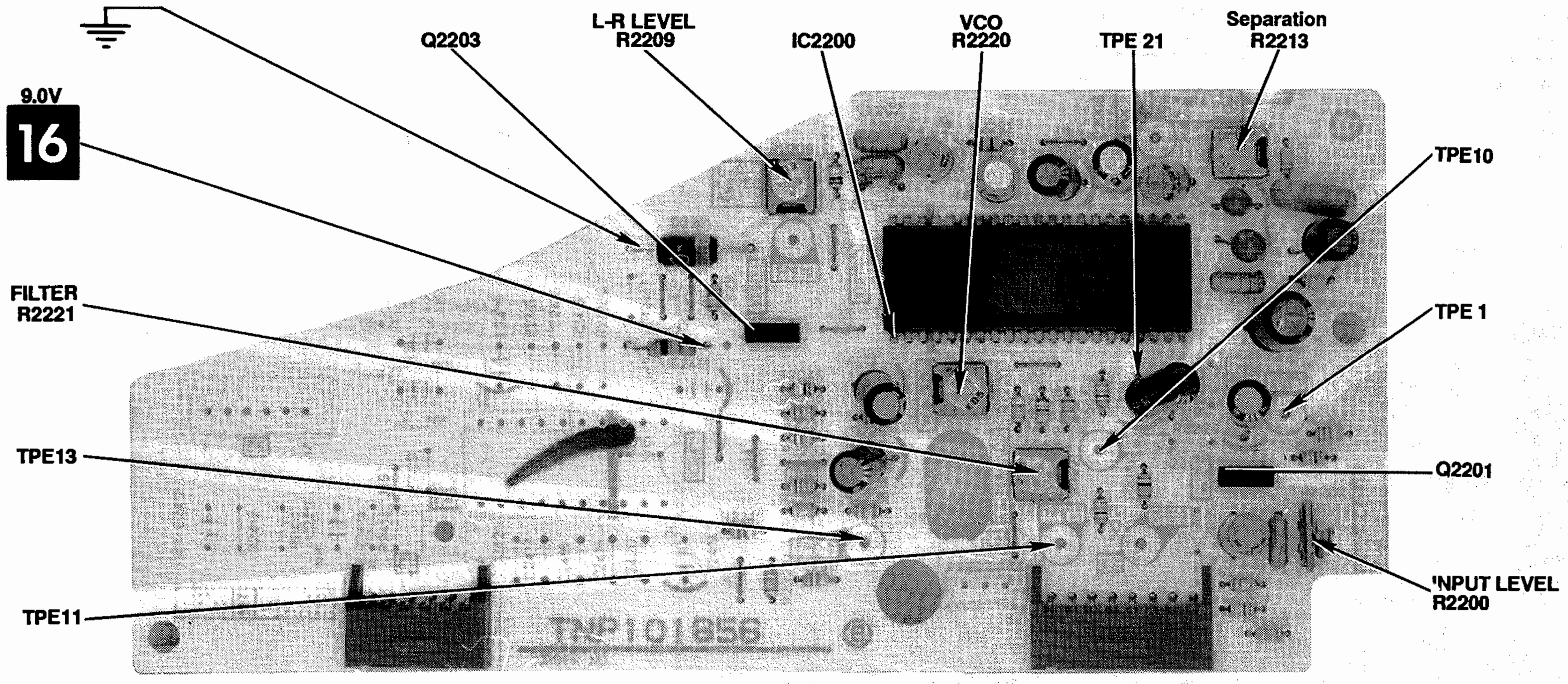

NOTE: ARROWS ON IC'S INDICATE PIN 1 UNLESS NOTED

A HOWARD W. SAMS CIRCUITRACE™ PHOTO

F-COMB FILTER BOARD

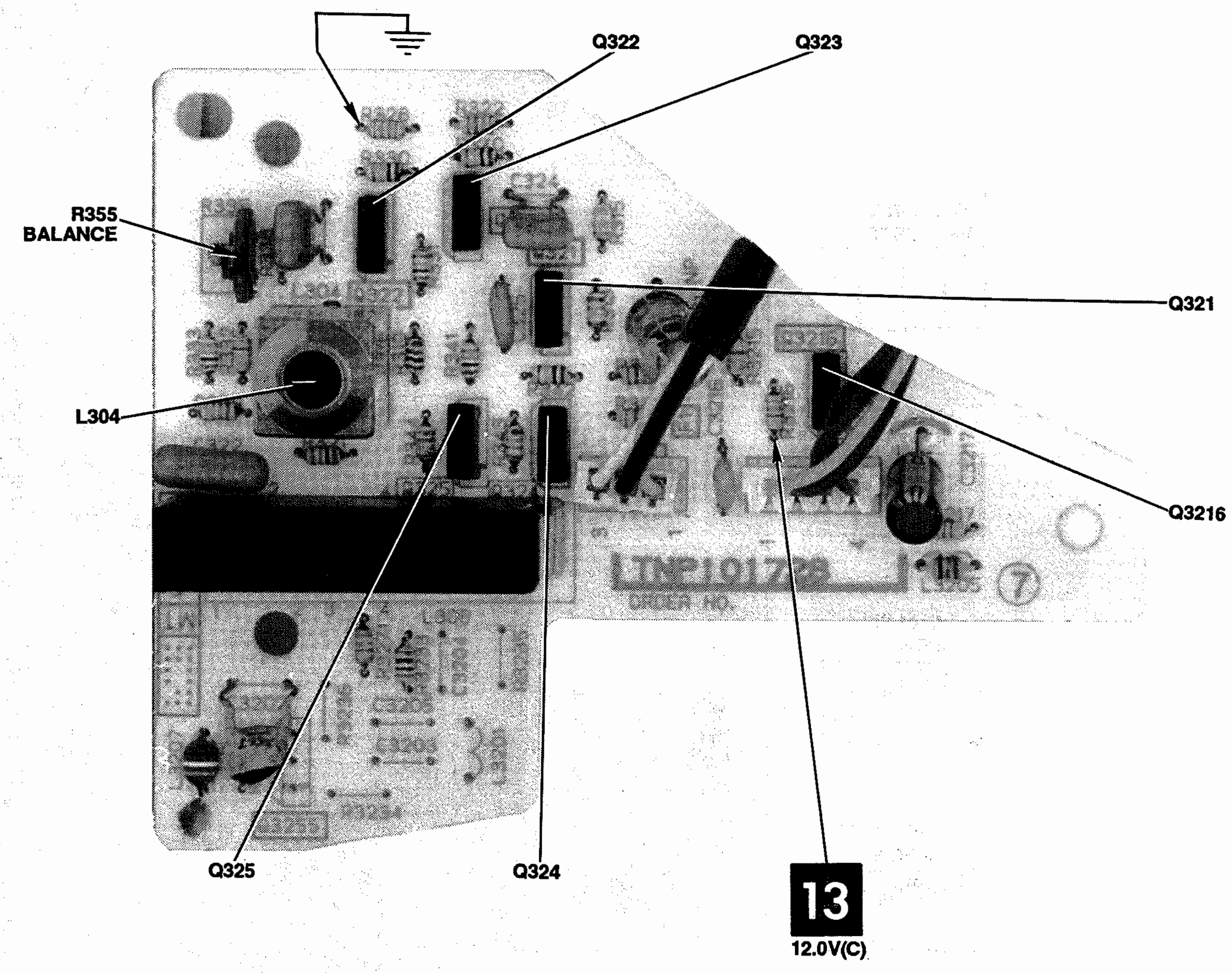

A HOWARD W. SAMS CIRCUITRACE™ PHOTO

A-MAIN BOARD

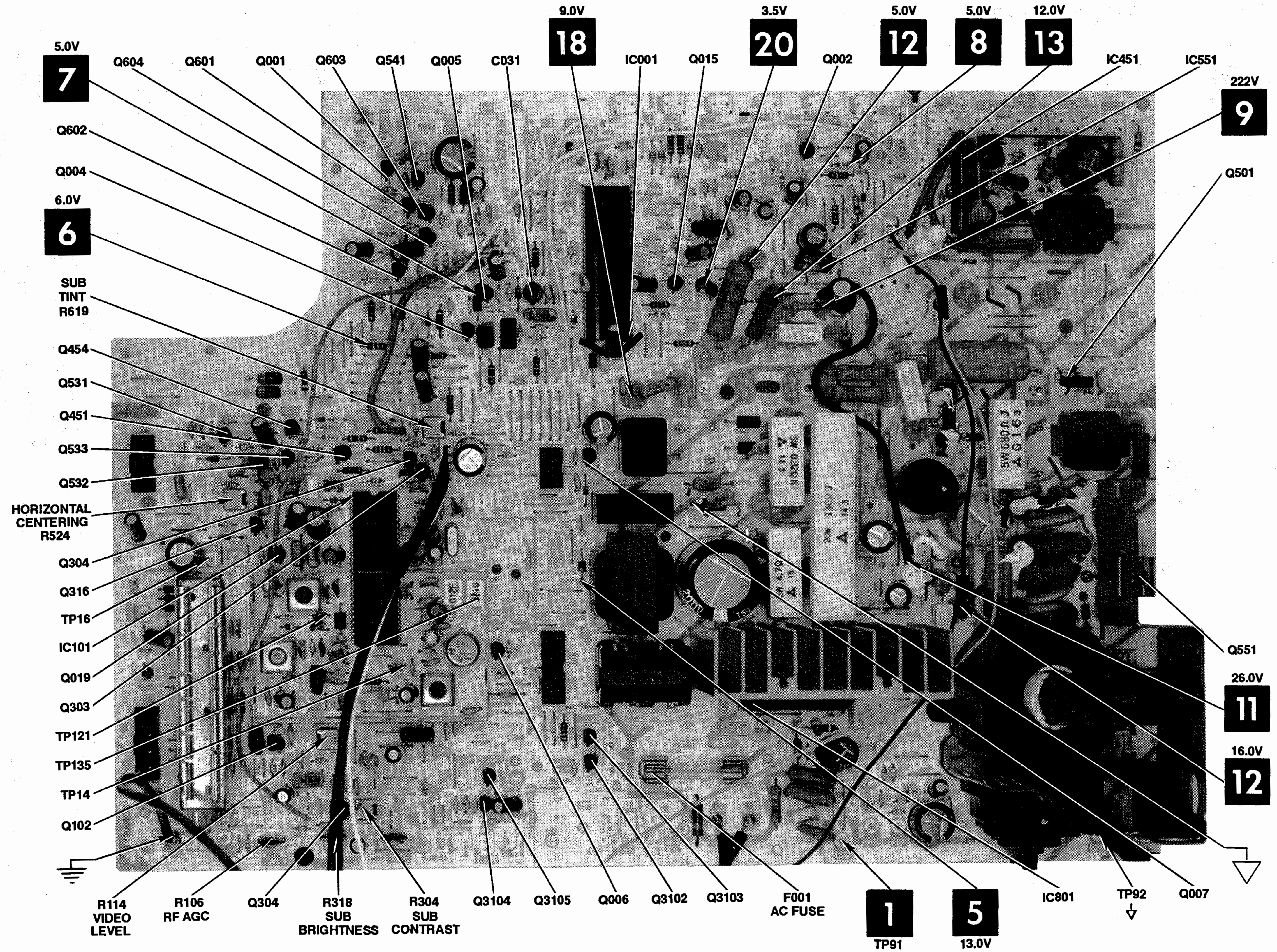

COMMON TIE POINT

△ TAKEN FROM COMMON TIE POINT

NOTE: ARROWS ON IC'S INDICATE PIN 1 UNLESS NOTED.

NOTE: ARROWS ON TRANSISTORS INDICATE BASE UNLESS NOTED.

A HOWARD W. SAMS CIRCUITRACE™ PHOTO

C-CRT BOARD

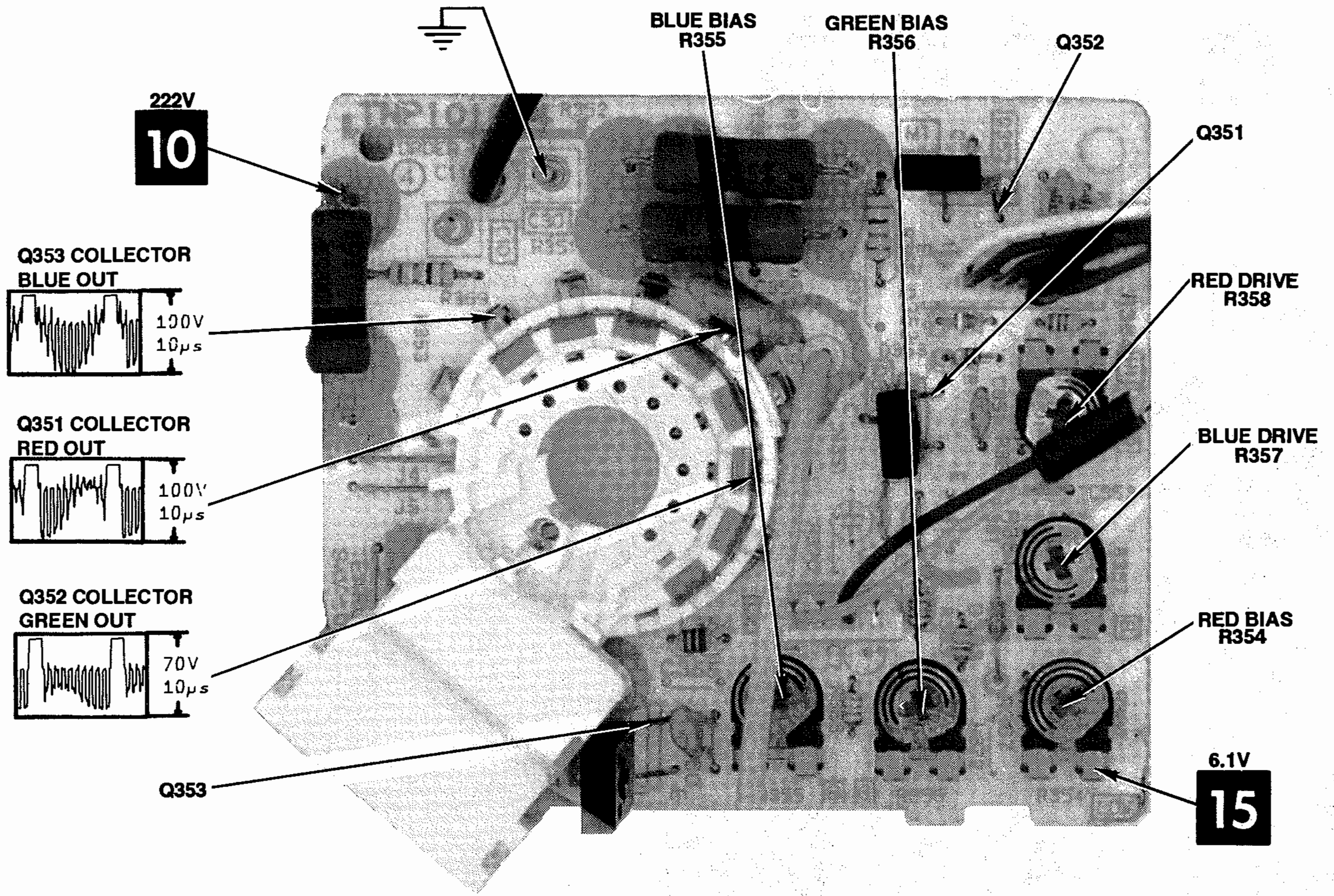

NOTE: ARROWS ON TRANSISTORS INDICATE BASE UNLESS NOTED

A HOWARD W. SAMS QUICK-CHECKS™ PHOTO

C-CRT BOARD

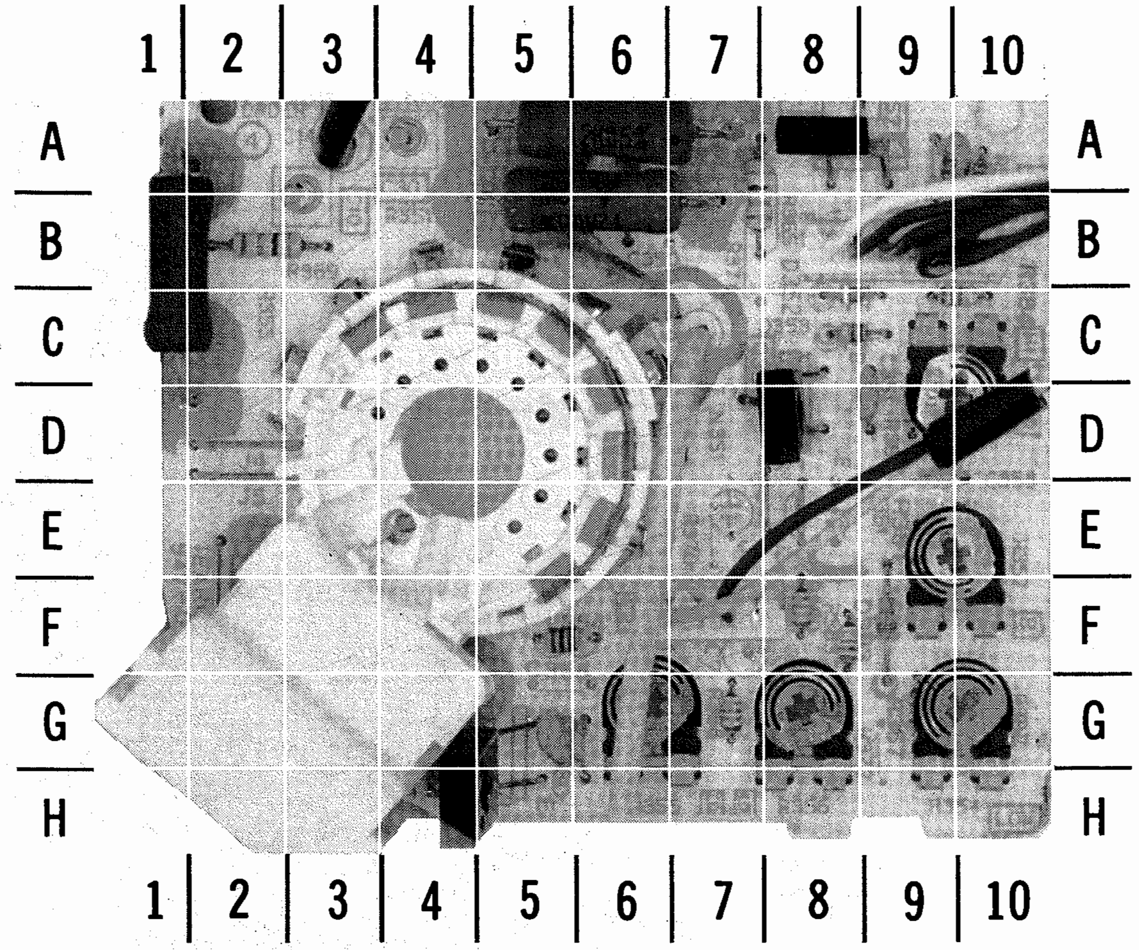

A HOWARD W. SAMS GRIDTRACE™ PHOTO

C-CRT BOARD, GRIDTRACE LOCATION GUIDE

C1	B-8	C360	G-5	R351	B-6	R360	D-9	R380	F-8
C2	F-6	D352	C-8	R352	A-6	R361	E-9	R382	G-10
C10	B-3	D353	C-8	R353	B-1	R363	A-10	R383	F-8
C30	A-4	D383	F-9	R354	G-10	R364	A-6	R384	C-10
C350	B-6	L354	F-5	R355	G-6	R365	B-7		
C351	D-9	Q351	D-8	R356	G-8	R367	G-9		
C352	A-9	Q352	A-8	R357	E-10	R368	G-7		
C353	D-9	Q353	G-5	R358	D-10	R369	B-2		

PARTS LIST

SET 2995 Page 7

SEMICONDUCTORS

(Select replacement for best results.)

	Item No.	Type No.	Mfr. Part No.	NTE Part No.	ECG Part No.	TCE Part No.
	D001	MA165	-	NTE519	ECG519	SK3100
	D004	MA165	-	NTE519	ECG519	SK3100
	D005	QA205D	TVSQA205D	NTE5010A	ECG5010A	SK5A1
	D020	MA165	-	NTE519	ECG519	SK3100
	D021	MA27TA	-	NTE605A	ECG605A	SK7952
	D022	1N4532	-	NTE177	ECG177	SK9091
		MA161	-	NTE177	ECG177	SK9091
	D025, 6	MA165	-	NTE519	ECG519	SK3100
	D031	ERA15-01	-	NTE552	ECG552	SK9000
		ERA15-01V3	-	NTE552	ECG552	SK9000
		AM01Z	-	NTE116	ECG116	SK3313
	D032	1N4532	-	NTE177	ECG177	SK9091
		MA162	-	NTE519	ECG519	SK3100
	D034	LN31GPHL	-	NTE3024	ECG3024	SK2024
	D302	1N4532	-	NTE177	ECG177	SK9091
	D304	MA856TV	-	NTE519	ECG519	SK3100
	D352	MA165	-	NTE519	ECG519	SK3100
	D353	MA4047L	-	NTE5009A	ECG5009A	SK4A7
	D383	MA27WA	-	NTE605A	ECG605A	SK7952
	D451	ERA15-01	-	NTE552	ECG552	SK9000
	D452, 3	MA165	-	NTE519	ECG519	SK3100
	D454	1N4532	-	NTE177	ECG177	SK9091
		MA150	-	NTE177	ECG177	SK9091
	D455	MA165	-	NTE519	ECG519	SK3100
	D457	MA4082M	-	NTE5016A	ECG5016A	SK8A2
	D502	QA208C	TVSQA208C	NTE5016A	ECG5016A	SK8A2
#	D531	AS01	-	NTE552	ECG552	SK9000
		AU01	-	NTE552	ECG552	SK9000
		ERA2204	-	NTE552	ECG552	SK9000
#	D532	MA165	-	NTE519	ECG519	SK3100
#	D533	QA206M	TVSQA206M	NTE5012A	ECG5012A	SK6A0
	D542	MA165	-	NTE519	ECG519	SK3100
#	D551	RU2N	-	NTE552	ECG552	SK9000
#	D552	AU02	-	NTE552	ECG552	SK9000
#	D554	AS01	-	NTE552	ECG552	SK9000
		AU01	-	NTE552	ECG552	SK9000
		ERA2204	-	NTE552	ECG552	SK9000
	D555	MA165	-	NTE519	ECG519	SK3100
	D556	MA1360H	-	-	-	-
	D557	QB105N	TVSQB105N	NTE135A	ECG135A	SK5V1
#	D558	RS3FS	-	-	-	-
	D559	RU2M	TVSRU2M	NTE552	ECG552	SK9000
	D560	QB109SA	TVSQB109SA	-	-	-
	D603	1N4532	-	NTE177	ECG177	SK9091
		MA150	-	NTE177	ECG177	SK9091
#	D801 - D804	RM11B	TVSRM11B	NTE125	ECG125	SK3081
		ERC1208	-	NTE125	ECG125	SK3081
#	D806	-	ERPW5B0M050D	-	-	-

For SAFETY use only equivalent replacement part.

SEMICONDUCTORS continued

(Select replacement for best results.)

	Item No.	Type No.	Mfr. Part No.	NTE Part No.	ECG Part No.	TCE Part No.
	D2201	QB109SA	TVSQB109SA	-	-	-
	D2401 - D2404	ERA15-02	-	NTE552	ECG552	SK9000
		ERA15-02V3	-	NTE116	ECG116	SK3313
	D3011	MA1110	-	NTE5020A	ECG5020A	SK11A
		MA1110TA	-	NTE5020A	ECG5020A	SK11A
	D3101, 2	MA165	-	NTE519	ECG519	SK3100
	D3255	MA4110	-	NTE5020A	ECG5020A	SK11A
	IC001	MN15151Q14N	-	-	-	-
#	IC101	AN5160NK	-	-	-	-
		AN5160NK-N	-	-	-	-
	IC451	LA7836	-	-	-	-
		LA7836-TV	-	-	-	-
#	IC551	AN78M12	-	NTE966	ECG966	SK3592
		AN78M12LB	-	NTE966	ECG966	SK3592
#	IC801	STR3230	TVSSTR3230	NTE1742	ECG1742	SK9995
	IC2101	AN5836	-	NTE1780	ECG1780	SK9731
	IC2102	M5218L	TVSM5218L	NTE778S	ECG778S	SK10139
	IC2200	CXA1124AS	-	-	-	-
	IC2301	AN7158N	-	NTE1373	ECG1373	SK4822
	IC3002	M52055P	-	-	-	-
	Q001	2SC1685Q	-	NTE85	ECG85	SK9229
		2SC1685QR	-	NTE85	ECG85	SK9229
	Q002	2SA564AR	-	NTE290A	ECG290A	SK3932
		2SA564AQR	-	NTE290A	ECG290A	SK3932
	Q004	2SC1685Q	-	NTE85	ECG85	SK9229
		2SC1685QR	-	NTE85	ECG85	SK9229
	Q005	2SA564AR	-	NTE290A	ECG290A	SK3932
		2SA564AQR	-	NTE290A	ECG290A	SK3932
	Q006, 7	2SC1685Q	-	NTE85	ECG85	SK9229
		2SC1685QR	-	NTE85	ECG85	SK9229
	Q015	2SA564AR	-	NTE290A	ECG290A	SK3932
		2SA564AQR	-	NTE290A	ECG290A	SK3932
	Q019	2SC1685Q	-	NTE85	ECG85	SK9229
		2SC1685QR	-	NTE85	ECG85	SK9229
	Q102	2SA564AR	-	NTE290A	ECG290A	SK3932
		2SA564AQR	-	NTE290A	ECG290A	SK3932
	Q301	2SC1685Q	-	NTE85	ECG85	SK9229
		2SC1685QR	-	NTE85	ECG85	SK9229
	Q303	2SA719R	-	NTE290A	ECG290A	SK3114A
		2SA719QR	-	NTE290A	ECG290A	SK3114A
	Q304	2SC1685Q	-	NTE85	ECG85	SK9229
		2SC1685QR	-	NTE85	ECG85	SK9229
	Q316	2SC1685Q	-	NTE85	ECG85	SK9229
		2SC1685QR	-	NTE85	ECG85	SK9229
	Q321 - Q325	2SD637-Q	-	NTE16	ECG16	SK9664
		2SD637Q	-	NTE16	ECG16	SK9664
	Q351 - Q353	2SC3063	-	NTE157	ECG157	SK3747
		2SC3063RL	-	NTE157	ECG157	SK3747
	Q451	2SC1685Q	-	NTE85	ECG85	SK9229
		2SC1685QR	-	NTE85	ECG85	SK9229

For SAFETY use only equivalent replacement part.

SET 2995 Page 8

PARTS LIST continued

CONTROLS

(All wattages 1/2 watt or less, unless otherwise listed.)

Item No.	Function	Resistance	Mfr. Part No.
R106	RF AGC	5000	EVN60AA00B53
R114	Video Level	500	EVND4AA00B52
R304	Sub Contrast	2000	EVND4AA00B23
R318	Sub Brightness	10K	EVN60AA00B14
R335	Balance Adjust	200	EVN60AA00B22
R354	Red Bias	2000	EVN49AA00B23
R355	Blue Bias	2000	EVN49AA00B23
R356	Green Bias	2000	EVN49AA00B23
R357	Blue Drive	300	EVN49AA00B32
R358	Red Drive	300	EVN49AA00B32
R453	Vertical Size	30K	EVN60AA00B34
R524	H Centering	200	EVND4AA00B22
R619	Sub Tint	5000	EvND4AA00B53
R2200	Input Level	10K	EVN60AA00B14
R2209	L-R Level	10K	EVND4AA00B14
R2213	Separation	5000	EVND4AA00B53
R2220	VCO	50K	EVND4AA00B54
R2221	Filter	20K	EVND4AA00B24

COILS (RF-IF)

Item No.	Rating	Mfr. Part No.
L006	Coil 5.6uH	TLUABTA5R6K
L007	Coil 5.6uH	TLUABTA5R6K
L008	Coil 5.6uH	TLUABTA5R6K
L011	Coil 1 uH	TLUABTA1R0K
L103	AFT	TLI67394-1
L104	Coil 1.2uH	TLQ012K205C
L105	VCO	TLI158755
L106	Coil 15uH	TLUABTA150K
L108	Coil 1.2uH	TLQ012K205C
L201	Quadrature	EISIEG011B
L202	Coil 4.7uH	TLUABTA4R7K
L304	Comb Filter	TLK153152
L354	Coil 150uH	TLUABTA151K
L3205	Coil 12uH	TLUABTA120K
L3207	Coil 39uH	ELEPH390JA

RESISTORS

	Item No.	Rating	Mfr. Part No.	NTE Replacement
#	D806	136.3 Cold NTC	ERPW5B0M050D	-
	R050	10K 1% 1/4W Mtl Flm	ER0S2CKF1002	-
	R051	10K 1% 1/4W Mtl Flm	ER0S2CKF1002	-
	R206	22 5% 1W Fusible	ERQ1CJP220	F1W022
#	R476	22K 5% 1/4W Cbn Flm	ERDS2TJ223	QW322
#	R509	3900 5% 2W Mtl Flm	ERG2ANJ392	2W239
#	R510	3600 5% 3W Mtl Flm	ERG3SJS362	2W236
#	R511	3600 5% 3W Mtl Flm	ERG3SJS362	2W236
#	R531	47 5% 1/4W Cbn Flm	ERD25FJ470	QW047
#	R532	24.9K 1% 1/4W Mtl Flm	ER0S2CKF2492	-
#	R533	10.2K 1% 1/4W Mtl Flm	ER0S2CKF1022	-
#	R534	680K 5% 1/4W Cbn Flm	ERDS2TJ684	QW468
#	R535	560 5% 1/4W Cbn Flm	ERDS2TJ561	QW156
#	R536	820 5% 1/4W Cbn Flm	ERDS2TJ821	QW182
#	R537	18K 5% 1/4W Cbn Flm	ERDS2TJ183	QW318
#	R538	8200 5% 1/4W Cbn Flm	ERDS2TJ822	QW282
#	R539	15K 5% 1/4W Cbn Flm	ERDS2TJ153	QW315
#	R551	1 5% 1W Fusible	ERQ1CJP1R0	F1W1D0
#	R552	1.8 5% 1/2W Fusible	ERQ12HJ1R8	-
#	R558	1 5% 1W Fusible	ERQ1CJP1R0	F1W1D0
	R559	68 5% 3W Mtl Flm	ERG3ANJ680	3W068
	R560	62 2% 2W Mtl Flm	ERG2SG620	2W062
	R565	820 5% 2W Fusible	ERQ2CJP821	F2W182
#	R569	100 5% 1/2W Cbn Flm	ERDS1FJ101	HW110
#	R580	680 5% 5W Mtl Flm	ERG5ZJ681	-
#	R801	.82 10% 5W WW	ERF5ZKR82	5WD82
#	R802	130 5% 20W WW	ERF20ZJ131	-
#	R804	220K 5% 1/4W Cbn Flm	ERDS2TJ224	QW422
#	R805	10K 5% 1/2W Cbn Flm	ERDS1TJ103	HW103
#	R807	47 5% 1/4W Cbn Flm	ERD25FJ470	QW047
#	R809	33 5% 1/4W Cbn Flm	ERD25FJ330	QW033
#	R810	4.7 10% 5W WW	ERF5ZK4R7	5W4D7
#	R815	2.7M 10% 1/2W Cbn Cmp	ERC12ZGK275	HW527
#	R816	1 10% 1/2W WW	ERW12PK1R0	-
	R2210	43K 1% 1/4W Mtl Flm	ER0S2CKF4302	-
	R2222	44.2K 1% 1/4W Mtl Flm	ER0S2CKF4422	-
	R2238	47K 1% 1/4W Mtl Flm	ER0S2CKF4702	-
	R2403	.68 10% 1/2W Fusible	ERQ12HKR68	-

For SAFETY use only equivalent replacement part.

PARTS LIST continued

SEMICONDUCTORS continued

(Select replacement for best results.)

Item No.	Type No.	Mfr. Part No.	NTE Part No.	ECG Part No.	TCE Part No.
Q454	2SA564AR	-	NTE290A	ECG290A	SK3932
	2SA564AQR	-	NTE290A	ECG290A	SK3932
Q501	2SC4212H	-	-	-	-
	2SC4212HLB	-	-	-	-
# Q531	2SC1685Q	-	NTE85	ECG85	SK9229
	2SC1685QR	-	NTE85	ECG85	SK9229
# Q532	2SA564AR	-	NTE290A	ECG290A	SK3932
	2SA564AQR	-	NTE290A	ECG290A	SK3932
# Q533	2SC1685Q	-	NTE85	ECG85	SK9229
	2SC1685QR	-	NTE85	ECG85	SK9229
Q541	2SC1685Q	-	NTE85	ECG85	SK9229
	2SC1685QR	-	NTE85	ECG85	SK9229
# Q551	2SD2057	-	NTE2302	ECG2302	SK9422
	2SD2057LB	-	NTE2302	ECG2302	SK9422
Q601 - Q604	2SC1685Q	-	NTE85	ECG85	SK9229
	2SC1685QR	-	NTE85	ECG85	SK9229
Q2201, 3	2SD637-Q	-	NTE16	ECG16	SK9664
	2SD637Q	-	NTE16	ECG16	SK9664
Q3102, 3	2SC1685Q	-	NTE85	ECG85	SK9229
	2SC1685QR	-	NTE85	ECG85	SK9229
Q3104	2SA564AR	-	NTE290A	ECG290A	SK3932
	2SA564AQR	-	NTE290A	ECG290A	SK3932
Q3105	2SC1685Q	-	NTE85	ECG85	SK9229
	2SC1685QR	-	NTE85	ECG85	SK9229
Q3216	2SD637-R	-	NTE16	ECG16	SK9664
	2SD637R	-	NTE16	ECG16	SK9664

For SAFETY use only equivalent replacement part.

COILS & TRANSFORMERS

Item No.	Function	Mfr. Part No.	On-Unit No.	Russell Part No.
# L570	Yoke 100° Horiz 1.32mh Vert 25.3mh	OLY15505F1	-	-
T001	Power Supply	TLP16297	-	-
T501	Horiz Drive	TLH15452	-	-
T502	Horiz Coupling	ETE19Z30AY	-	-
# T551	Horiz Output	TLF15544F(1)	-	FBT-241
T2401	Audio Power	ETP48EU28B	-	-

For SAFETY use only equivalent replacement part.
(1) Focus and Screen Controls are part of Horiz Output Transformer (T551)

CAPACITORS

Item	Rating	Mfr. Part No.
C022	33 N150 50V 5%	ECCF1H330JP
C023	15 N150 50V 5%	ECCF1H150JP
C031	30pF Trimmer	ECRHA030E41
C103	2 NPO 50V .5pF	ECCF1H020CC
C104	2 NPO 50V .5pF	ECCF1H020CC
C112	18 NPO 50V 5%	ECCF1H180JC
C151	68 NPO 50V 5%	ECCF1H680JC
C152	15 NPO 50V 5%	ECCF1H150JC
C155	2 NPO 50V .5pF	ECCF1H020CC
C207	68 N220 50V 10%	ECCF1H680KP
C314	18 NPO 50V 5%	ECCF1H180JC
C503	220 N750 50V 5%	ECCF1H221JU
# C533	.01 50V	ECKF1H103ZF
# C551	.56 200V 5%	ECQF2H564JS
# C561	.0015 2KV 5%	ECKD3D152JB
# C562	.0022 2KV 5%	ECKD3D222JB
# C564	.0047 1.2KV 5%	ECWH12H472JR
# C569	.18 200V 5%	ECQM2184JZ
# C572	.0033 1.2KV 5%	ECWH12H332JS
# C573	180 2KV 5%	ECKD3D181JB
# C575	.0012 2KV 5%	ECKD3D122JB
# C580	560 2KV 5%	ECKD3D561JB
C605	8 N750 50V .25pF	ECCF1H080DU
# C802	.0047 500V	ECKD2H472PU
# C803	.0047 500V	ECKD2H472PU
# C804	.0047 500V	ECKD2H472PU
# C817	.015 125V AC 10%	ECQU1A153KH
# C818	.015 125V AC 10%	ECQU1A153KH
# C819	.0022 125V AC	ECKCFL222ZE
C3202	56 NPO 50V 5%	ECCF1H560JC

For SAFETY use only equivalent replacement part.

ELECTROLYTIC CAPACITORS

Item	Rating	Mfr. Part No.
C028	10 16V	ECSF16E10VB
C202	1 50V NP	ECEA1HN010S
C301	10 16V NP	ECEA1CN100S
C321	47 10V NP	ECEA1AN470S
C452	1 25V	ECSF25E1VB
# C531	33 25V	ECEA1EU3330
# C553	22 250V	ECEA2EU220W
# C559	220 25V	ECEA1EU221
# C566	470 35V	ECEA1VU471
# C805	470 200V	ECES2DU471M4
# C806	22 160V	ECEA2CU220W
# C812	33 160V	ECEA160V33Z
C2200	10 16V NP	ECEA1CN100S
C2204	.22 50V NP	ECEA1HNR22S
C2209	10 16V	ECSZ16EF10
C2211	3.3 16V	ECSZ16EF3R3
C2212	4.7 25V NP	ECEA1EN4R7S
C2213	4.7 25V NP	ECEA1EN4R7S
C3007	3.3 50V NP	ECEA1HN3R3S
C3008	3.3 50V NP	ECEA1HN3R3S
C3010	3.3 50V NP	ECEA1HN3R3S

For SAFETY use only equivalent replacement part.

CABINET PARTS

Model	CTN-2580S
Item	**Part No.**
Cabinet Front	TXFKY710SER
Cabinet Back	TXFKU138SER
Speaker Overlay, Left	TXP2A50653
Speaker Overlay, Right	TXP2A50652

SPEAKERS

Item No.	Description	Mfr. Part No.	Quam Part No.
SP1, SP2	4 1/2" 8 Ohm	EAS12P411DG	-
SP3, SP4	1 1/2" 140 Ohm	EAS4FP10PG	-

MISCELLANEOUS

	Item No.	Description	Mfr. Part No.	Notes
#	CRA801	Capristor	EXNG131P155	130pF/1.5Meg
#	F001	Fuse	XBA1F40NU100	4 Amp 125V AC
	L010	Ferrite Bead	EXCELSA24	-
	L012	Ferrite Bead	EXCELSA24	-
	L109	Ferrite Bead	EXCELSA35	-
	L306	Delay Line	EFDEN645B35B	-
#	L551	Linearity	TLH6663P	-
#	L555	Ferrite Bead	EXCELSA24	-
#	L556	Ferrite Bead	EXCELSA24	-
	L558	Ferrite Bead	EXCELSA24	-
	L559	Ferrite Bead	EXCELSA24	-
	L562	Ferrite Bead	TSC910	-
	L563	Ferrite Bead	TSC910	-
	L564	Ferrite Bead	TSC910	-
	L565	Ferrite Bead	TSC910	-
#	L801	Choke, AC Line	ELF18D650A	-
#	L804	Degaussing	OLK19003F	-
#	P800	Cord, AC Line	TSX3134X	-
#	RL001	Relay	TSE1864	-
	S050	Switch	EVQQVC13T	Power
	S051	Switch	EVQQVC13T	Volume Down
	S052	Switch	EVQQVC13T	Volume Up
	S053	Switch	EVQQVC13T	Channel Down
	S054	Switch	EVQQVC13T	Channel Up
	S055	Switch	EVQQVC13T	Normal
	S058	Switch	EVQQVC13T	Set Up
	S059	Switch	EVQQVC13T	Video
	S060	Switch	EVQQVC13T	TV/VIDEO
	S2301	Switch	ESD1512250	Speaker Switch
#	V1	CRT	A63AEH20X	-
	X001	Oscillator	TSS2077MX	Crystal
	X101	Filter	EFCH45MVK12N	SAW
	X102	Trap	EFCS4R5MW3BA	4.5MHz
	X201	Filter	EFCS4R5MS4	4.5MHz
	X501	Oscillator	EF0A503KS41	Crystal
	X601	Oscillator	TSS816MX	3.58MHz
		Board	TNP190089BD(1)	A
		Board	TNP101654BC(1)	C
		Board	TNP101657DE(1)	X
		Board	TNP101728BA(1)	F
		Board	TNP101656(1)	E
		Board	ONP19027FB(1)	J
		Board	ONP12026HE(1)	K
		Magnet	TLC2047-2	Purity and Static Conv
		Remote Receiver	TNQ2683	-
		Remote Transmitter	EUR641032	-
		Socket	TJS1A5050	For CRT
		U/V Tuner	ENV568C6G3(1)	-
		Wedge	TMM2M30201	-

For SAFETY use only equivalent replacement part.
(1) Contact PTS Electronics Corporation for replacement; order by manufacturer's part number.

Important Parts Information

- The parts listed here are those not usually available from a well-stocked supply cabinet or bin.
- Where items may be replaced with equivalent parts, several alternates are shown from participating vendors.
- On the parts lists, safety items are marked with a # to remind you that only exact replacements are recommended for these items.
- When ordering parts, state the model number, part number, and description.

Obtaining Parts

Many of these parts are available from your local Sams authorized distributor or the manufacturer of the equipment. Call Sams for the name of your nearest distributor:

800-428-7267

Or consult the Sams *Annual Index* for the address of the original equipment manufacturer.

Participating Vendors

Information on test equipment and replacement parts is listed in these pages for the following participating vendors. Consult the Sams *Annual Index* for their current address.

- B&K Precision
- Custom Components Corporation (Chek-A-Color)
- EVG / Russell Industries, Inc.
- NTE Electronics, Inc. (NTE)
- Philips ECG Company (ECG)
- PTS Electronics Corporation (PTS)
- Quam-Nichols Co. (Quam)
- Sencore, Inc.
- Thomson Consumer Electronics, Inc. (SK, TCE)

Created with pride by the employees of Howard W. Sams & Company.

R. Bryant, B. Buchanan, D. Curran, G. Farrell, B. Fink, M. Herkless, J. Kocha, F. Malek, B. Smith, J. Watson